XLamp® XM-L® Color Gen 2 LEDs

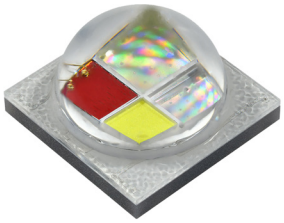

XM-L Color Gen 2 High Density

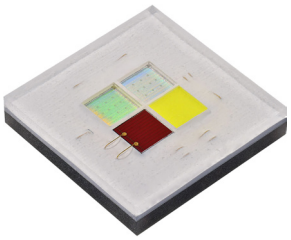

XM-L Color Gen 2 High Intensity

PRODUCT DESCRIPTION

The XLamp® XM-L® Gen 2 LEDs are multi-color RGBW LEDs that deliver the combination of high lumen output and great color mixing in a small 5.0 x 5.0 mm package. The XLamp XM-L Color Gen 2 LEDs feature the smallest possible distance between LED die, creating a small optical source for excellent optical control and efficient color mixing. Compared to the first generation LED, Gen 2 features a 75% higher maximum drive current and significant improvements in light output and efficacy, enabling almost double the maximum light output. Gen 2 also includes a new High Intensity version that further reduces the optical source size for even greater levels of optical control.

XLamp XM-L Color Gen 2 LEDs are optimized for all high-performance RGBW lighting applications, including color-changing, stage, architectural and entertainment.

FEATURES

- Available in red, green, blue and white in a single 5 mm x 5 mm package
- Maximum drive current per LED die: 1.75 A
- Individually addressable LEDs
- Reflow solderable – JEDEC J-STD-020
- Electrically neutral thermal path
- RoHS and REACH compliant
- UL® recognized component (E349212)

TABLE OF CONTENTS

Characteristics - Complete Package 2
Characteristics - Per LED Die..... 2
Flux Characteristics - High Density 3
Flux Characteristics - High Intensity 5
Relative Spectral Power Distribution 7
Relative Flux vs Junction Temperature..... 9
Electrical Characteristics..... 9
Relative Flux vs. Current 10
Typical Spatial Distribution..... 10
Order and Bin Code Formats..... 11
Performance Groups – Luminous Flux..... 12
Performance Groups – Chromaticity..... 13
Performance Groups – Dominant Wavelength..... 16
Performance Groups – Chromaticity Bins . 16
Reflow Soldering Characteristics..... 17
Notes 18
Mechanical Dimensions 19
Tape and Reel..... 21
Packaging..... 24

Cree LED / 4400 Silicon Drive / Durham, NC 27703 USA / +1.919.313.5330 / www.cree-led.com

© 2022 Cree LED. The information in this document is subject to change without notice. Cree®, XLamp®, XML®, and the Cree logo are registered trademarks, and the Cree LED logo is a trademark, of Cree LED. UL® and the UL logo are registered trademarks of UL LLC.

CHARACTERISTICS - COMPLETE PACKAGE

The following table lists the product characteristics for the XLamp XM-L Color Gen 2 LED package, measured with all LED dies on simultaneously and each LED die connected to independent drive circuits at 350 mA.

Characteristics	Unit	Minimum	Typical	Maximum
Thermal resistance, junction to solder point	°C/W		0.8	
Viewing angle - High Density (FWHM)	degrees (°)		120	
Viewing angle - High Intensity (FWHM)	degrees (°)		118	
ESD withstand voltage (HBM per Mil-Std-883D)	V			8000
LED junction temperature	°C			150

CHARACTERISTICS - PER LED DIE

The following table lists the product characteristics for each LED die within the XLamp XM-L Color Gen 2 LED package.

Characteristics	Unit	Minimum	Typical	Maximum
Temperature coefficient of voltage - red	mV/°C		-1.7	
Temperature coefficient of voltage - green	mV/°C		-1	
Temperature coefficient of voltage - blue, white	mV/°C		-1.2	
DC forward current - red, green, blue, white	mA			1750
Forward voltage (@ 350 mA, 25 °C) - red	V		2.1	2.7
Forward voltage (@ 350 mA, 25 °C) - green	V		2.6	3.0
Forward voltage (@ 350 mA, 25 °C) - blue, white	V		2.9	3.2

© 2022 Cree LED. The information in this document is subject to change without notice. Cree®, XLamp®, XML®, and the Cree logo are registered trademarks, and the Cree LED logo is a trademark, of Cree LED. UL® and the UL logo are registered trademarks of UL LLC.

FLUX CHARACTERISTICS - HIGH DENSITY (T_J = 25 °C)

The following table provides order codes for XM-L Gen 2 High-Density Color LEDs. For a complete description of the order code nomenclature, please refer to the Order and Bin Code Formats section (page 11).

Color		CCT / Dominant Wavelength Range		Minimum Luminous Flux @ 350 mA		Typical Luminous Flux @ 350 mA	Order Code
		Minimum	Maximum	Group	Flux (lm)	Flux (lm)	
Color + Cool White	Red	620 nm	630 nm	C5	60	80	XMLDCL-00-0000-00C5AAAA1
	Green	520 nm	535 nm		140	155	
	Blue	450 nm	465 nm		18	23	
	Cool White	5700 K	8000 K		140	155	
	Red	620 nm	630 nm	C5	60	80	XMLDCL-00-0000-00C5AAA02
	Green	520 nm	535 nm		140	155	
	Blue	450 nm	465 nm		18	23	
	Cool White	5700 K	8000 K		140	155	
	Red	620 nm	630 nm	C5	60	80	XMLDCL-00-0000-00C5AAAAA
	Green	520 nm	535 nm		140	155	
	Blue	450 nm	465 nm		18	23	
	Cool White	5700 K	8000 K		140	155	
	Red	620 nm	630 nm	C5	60	80	XMLDCL-00-0000-00C5AAAA2
	Green	520 nm	535 nm		140	155	
	Blue	450 nm	465 nm		18	23	
	Cool White	5700 K	8000 K		140	155	
Color + Neutral White	Red	620 nm	630 nm	C4	60	80	XMLDCL-00-0000-00C4AAAE5
	Green	520 nm	535 nm		140	155	
	Blue	450 nm	465 nm		18	23	
	Neutral White	3700 K	4300 K		120	145	
	Red	620 nm	630 nm	C4	60	80	XMLDCL-00-0000-00C4AAAB1
	Green	520 nm	535 nm		140	155	
	Blue	450 nm	465 nm		18	23	
	Neutral White	3700 K	4300 K		120	145	

Notes:

- Cree LED maintains a tolerance of ±7% on flux and power measurements, ±0.005 on chromaticity (CCx, CCy) measurements and ±1 nm on dominant wavelength measurements. See the Measurements section (page 18).
- Flux and chromaticity are measured with each LED die connected to independent drive circuits at 350 mA. The flux and chromaticity of each LED die within the XLamp XM-L Color Gen 2 LED package are measured individually.

© 2022 Cree LED. The information in this document is subject to change without notice. Cree®, XLamp®, XML®, and the Cree logo are registered trademarks, and the Cree LED logo is a trademark, of Cree LED. UL® and the UL logo are registered trademarks of UL LLC.

FLUX CHARACTERISTICS - HIGH DENSITY (T_J = 25 °C) - CONTINUED

Color		CCT / Dominant Wavelength Range		Minimum Luminous Flux @ 350 mA		Typical Luminous Flux @ 350 mA	Order Code
		Minimum	Maximum	Group	Flux (lm)	Flux (lm)	
Color + Warm White	Red	620 nm	630 nm	C3	60	80	XMLDCL-00-0000-00C3AAAE7
	Green	520 nm	535 nm		140	155	
	Blue	450 nm	465 nm		18	23	
	Warm White	2700 K	3200 K		100	130	
	Red	620 nm	630 nm	C3	60	80	XMLDCL-00-0000-00C3AAAC1
	Green	520 nm	535 nm		140	155	
	Blue	450 nm	465 nm		18	23	
	Warm White	2700 K	3200 K		100	130	

Notes:

- Cree LED maintains a tolerance of ±7% on flux and power measurements, ±0.005 on chromaticity (CCx, CCy) measurements and ±1 nm on dominant wavelength measurements. See the Measurements section (page 18).
- Flux and chromaticity are measured with each LED die connected to independent drive circuits at 350 mA. The flux and chromaticity of each LED die within the XLamp XM-L Color Gen 2 LED package are measured individually.

© 2022 Cree LED. The information in this document is subject to change without notice. Cree®, XLamp®, XML®, and the Cree logo are registered trademarks, and the Cree LED logo is a trademark, of Cree LED. UL® and the UL logo are registered trademarks of UL LLC.

FLUX CHARACTERISTICS - HIGH INTENSITY (T_J = 25 °C)

The following table provides order codes for XM-L Gen 2 High-Intensity Color LEDs. For a complete description of the order code nomenclature, please refer to the Order and Bin Code Formats section (page 11).

Color		CCT / Dominant Wavelength Range		Minimum Luminous Flux @ 350 mA		Typical Luminous Flux @ 350 mA	Order Code
		Minimum	Maximum	Group	Flux (lm)	Flux (lm)	
Color + Cool White	Red	620 nm	630 nm	A4	50	65	XMLDCL-H0-0000-00A4AAAA1
	Green	520 nm	535 nm		130	140	
	Blue	450 nm	465 nm		14	17	
	Cool White	5700 K	8000 K		120	140	
	Red	620 nm	630 nm	A4	50	65	XMLDCL-H0-0000-00A4AAA02
	Green	520 nm	535 nm		130	140	
	Blue	450 nm	465 nm		14	17	
	Cool White	5700 K	8000 K		120	140	
	Red	620 nm	630 nm	A4	50	65	XMLDCL-H0-0000-00A4AAAAA
	Green	520 nm	535 nm		130	140	
	Blue	450 nm	465 nm		14	17	
	Cool White	5700 K	8000 K		120	140	
	Red	620 nm	630 nm	A4	50	65	XMLDCL-H0-0000-00A4AAAA2
	Green	520 nm	535 nm		130	140	
	Blue	450 nm	465 nm		14	17	
	Cool White	5700 K	8000 K		120	140	
Color + Neutral White	Red	620 nm	630 nm	A4	50	65	XMLDCL-H0-0000-00A4AAAE5
	Green	520 nm	535 nm		130	140	
	Blue	450 nm	465 nm		14	17	
	Neutral White	3700 K(	4300 K		120	135	
	Red	620 nm	630 nm	A4	50	65	XMLDCL-H0-0000-00A4AAAB1
	Green	520 nm	535 nm		130	140	
	Blue	450 nm	465 nm		14	17	
	Neutral White	3700 K(	4300 K		120	135	

Notes:

- Cree LED maintains a tolerance of ±7% on flux and power measurements, ±0.005 on chromaticity (CCx, CCy) measurements and ±1 nm on dominant wavelength measurements. See the Measurements section (page 18).
- Flux and chromaticity are measured with each LED die connected to independent drive circuits at 350 mA. The flux and chromaticity of each LED die within the XLamp XM-L Color Gen 2 LED package are measured individually.

© 2022 Cree LED. The information in this document is subject to change without notice. Cree®, XLamp®, XML®, and the Cree logo are registered trademarks, and the Cree LED logo is a trademark, of Cree LED. UL® and the UL logo are registered trademarks of UL LLC.

FLUX CHARACTERISTICS - HIGH INTENSITY (T_J = 25 °C) - CONTINUED

Color		CCT / Dominant Wavelength Range		Minimum Luminous Flux @ 350 mA		Typical Luminous Flux @ 350 mA	Order Code
		Minimum	Maximum	Group	Flux (lm)	Flux (lm)	
Color + Warm White	Red	620 nm	630 nm	A3	50	65	XMLDCL-H0-0000-00A3AAAE7
	Green	520 nm	535 nm		130	140	
	Blue	450 nm	465 nm		14	17	
	Warm White	2700 K	3200 K		100	120	
	Red	620 nm	630 nm	A3	50	65	XMLDCL-H0-0000-00A3AAAC1
	Green	520 nm	535 nm		130	140	
	Blue	450 nm	465 nm		14	17	
	Warm White	2700 K	3200 K		100	120	

Notes:

- Cree LED maintains a tolerance of ±7% on flux and power measurements, ±0.005 on chromaticity (CCx, CCy) measurements and ±1 nm on dominant wavelength measurements. See the Measurements section (page 18).
- Flux and chromaticity are measured with each LED die connected to independent drive circuits at 350 mA. The flux and chromaticity of each LED die within the XLamp XM-L Color Gen 2 LED package are measured individually.

© 2022 Cree LED. The information in this document is subject to change without notice. Cree®, XLamp®, XML®, and the Cree logo are registered trademarks, and the Cree LED logo is a trademark, of Cree LED. UL® and the UL logo are registered trademarks of UL LLC.

RELATIVE SPECTRAL POWER DISTRIBUTION (I_F = 350 mA PER LED DIE, 25 °C)

The following graph represents typical spectral output of the XLamp XM-L Color Gen 2 LED with each LED die on independently.

High Density

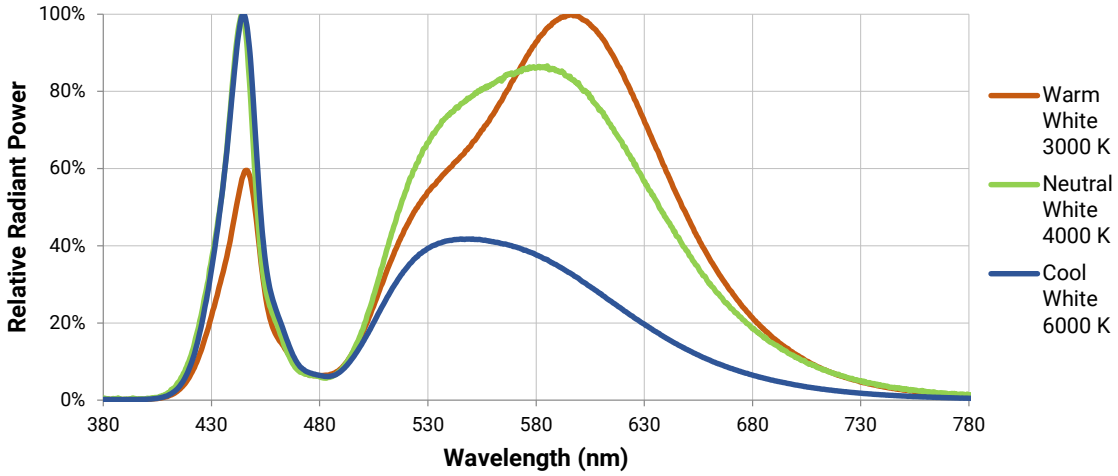

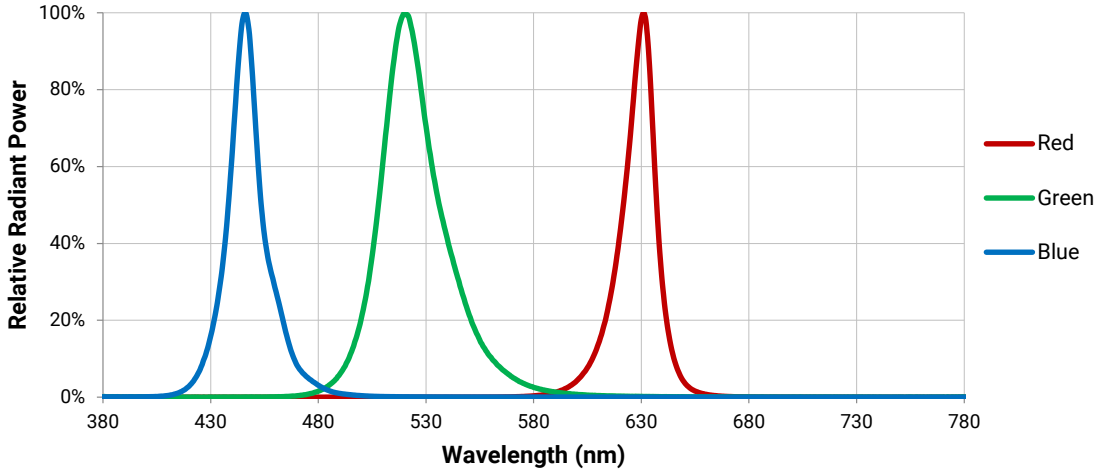

© 2022 Cree LED. The information in this document is subject to change without notice. Cree®, XLamp®, XML®, and the Cree logo are registered trademarks, and the Cree LED logo is a trademark, of Cree LED. UL® and the UL logo are registered trademarks of UL LLC.

RELATIVE SPECTRAL POWER DISTRIBUTION (I_F = 350 mA PER LED DIE, 25 °C) - CONTINUED

The following graph represents typical spectral output of the XLamp XM-L Color Gen 2 LED with each LED die on independently.

High Intensity

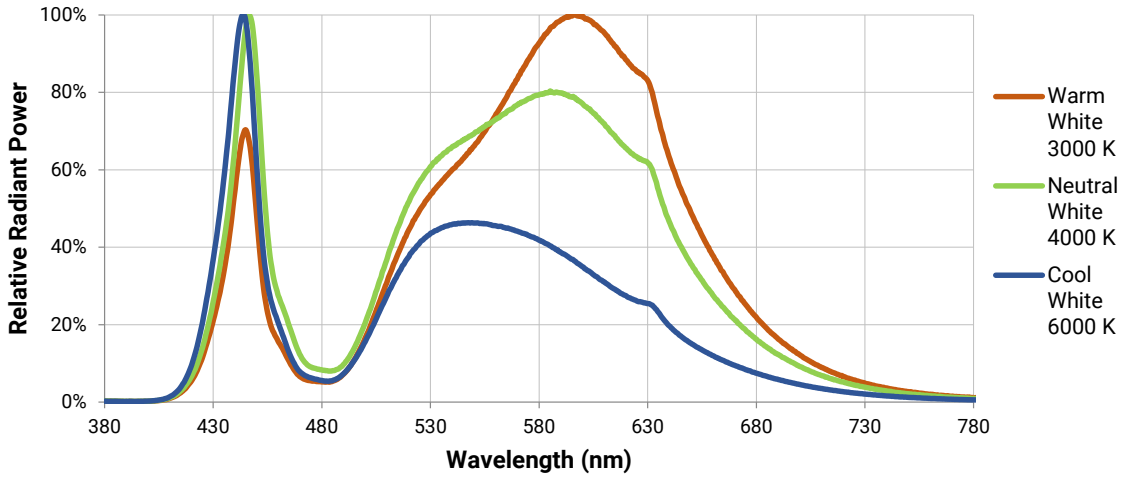

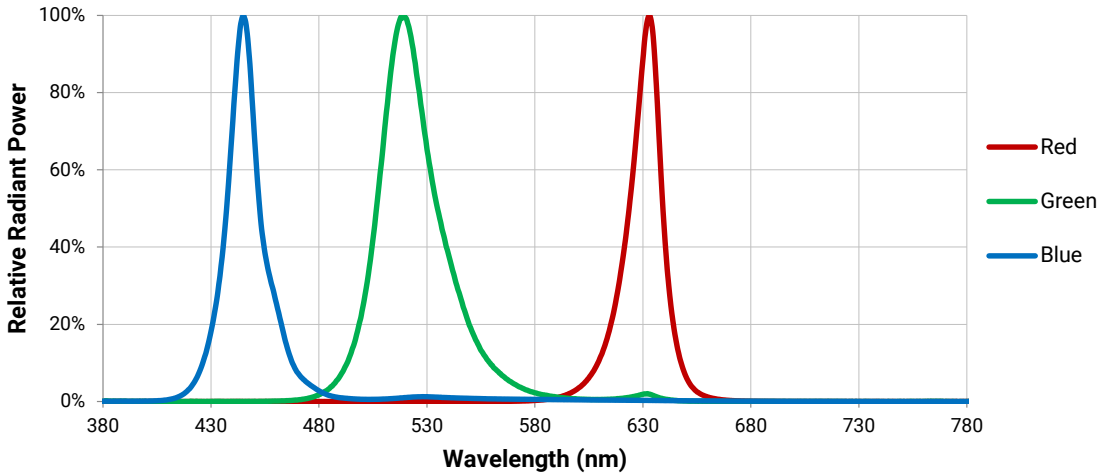

© 2022 Cree LED. The information in this document is subject to change without notice. Cree®, XLamp®, XML®, and the Cree logo are registered trademarks, and the Cree LED logo is a trademark, of Cree LED. UL® and the UL logo are registered trademarks of UL LLC.

RELATIVE FLUX VS JUNCTION TEMPERATURE (I_F = 350 mA)

The following graph represents typical performance of each LED die in the XLamp XM-L Color Gen 2 LED.

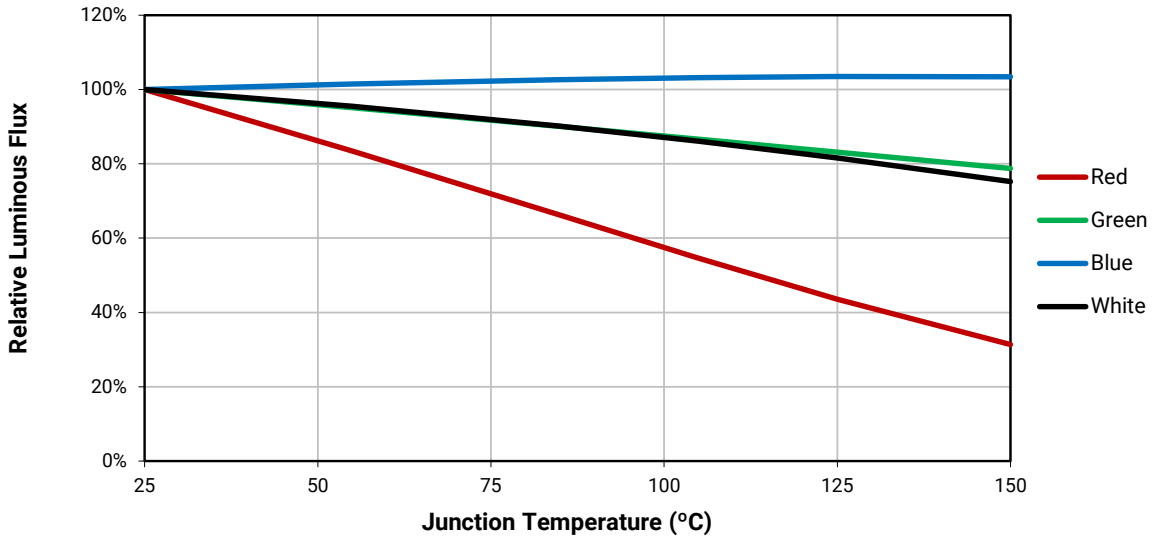

ELECTRICAL CHARACTERISTICS (T_J = 25 ˚C)

The following graph represents typical performance of each LED die in the XLamp XM-L Color Gen 2 LED.

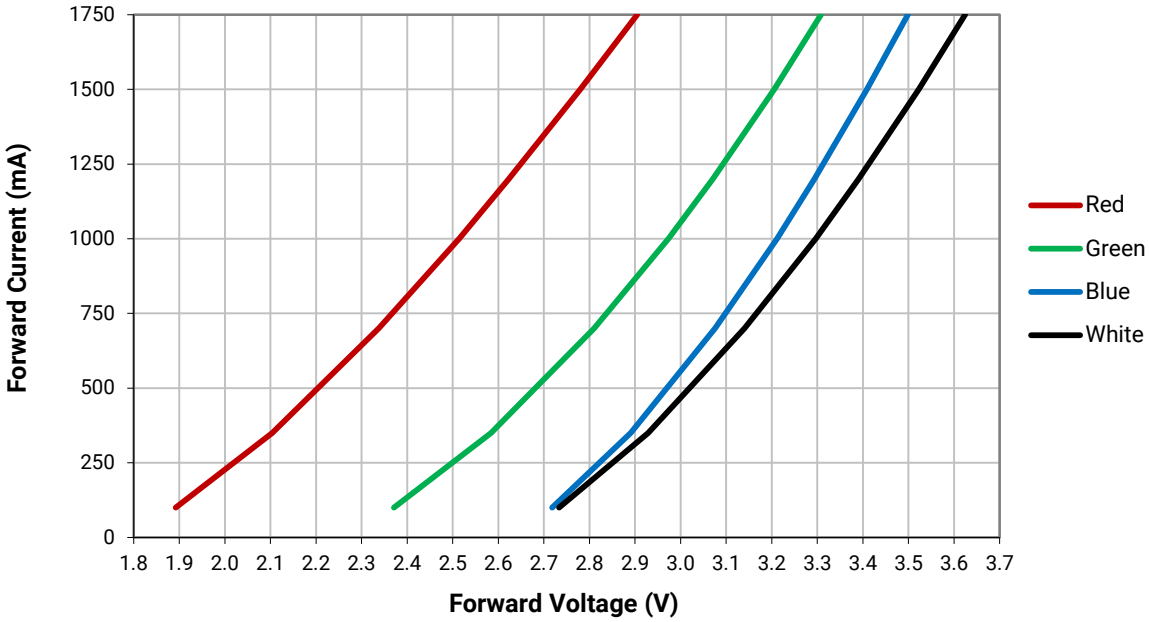

© 2022 Cree LED. The information in this document is subject to change without notice. Cree®, XLamp®, XML®, and the Cree logo are registered trademarks, and the Cree LED logo is a trademark, of Cree LED. UL® and the UL logo are registered trademarks of UL LLC.

RELATIVE FLUX VS. CURRENT (T_J = 25 ˚C)

The following graph represents typical performance of each LED die in the XLamp XM-L Color Gen 2 LED.

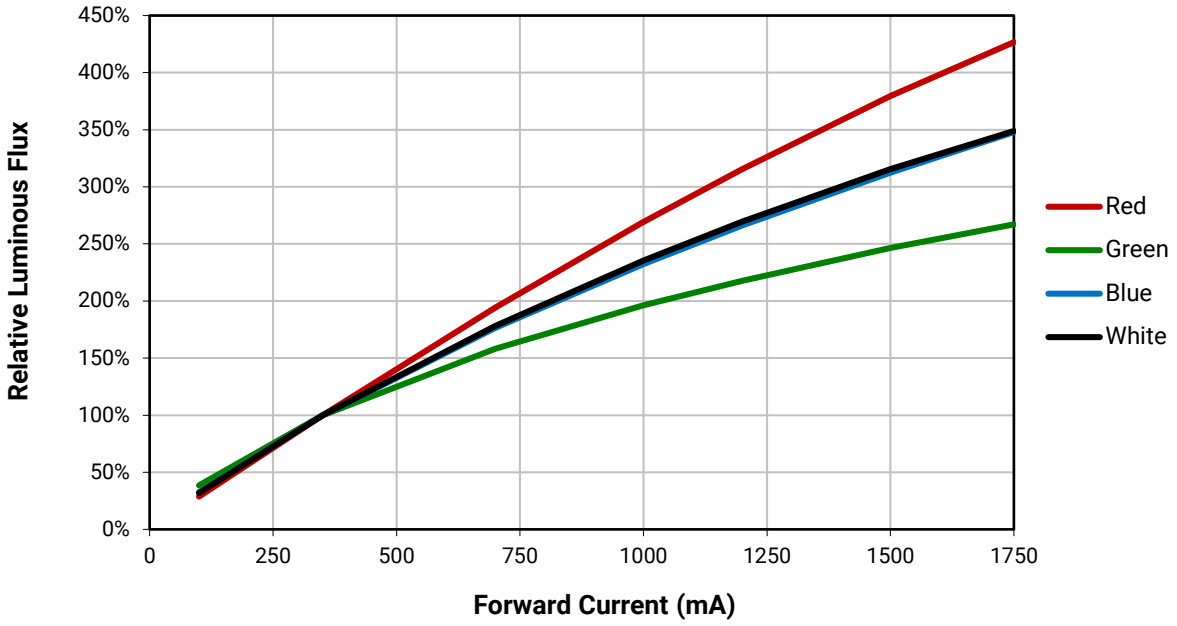

TYPICAL SPATIAL DISTRIBUTION

The following graph represents typical output of the XLamp XM-L Color Gen 2 LED with all four LEDs on simultaneously.

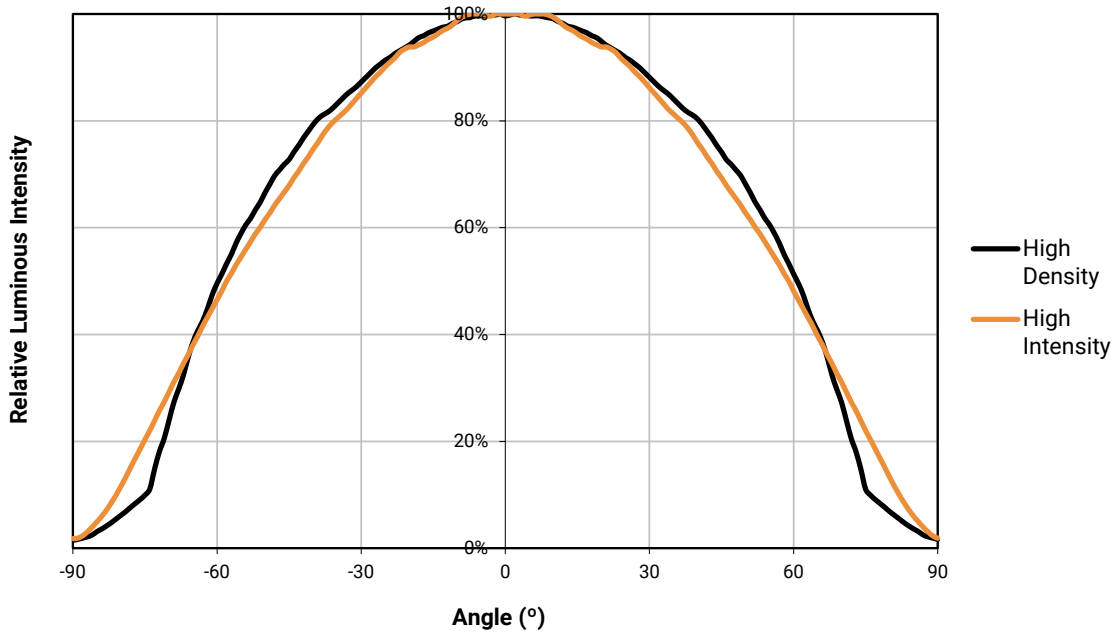

© 2022 Cree LED. The information in this document is subject to change without notice. Cree®, XLamp®, XML®, and the Cree logo are registered trademarks, and the Cree LED logo is a trademark, of Cree LED. UL® and the UL logo are registered trademarks of UL LLC.

ORDER AND BIN CODE FORMATS

Order codes and bin codes are configured in the following manner:

Order Code

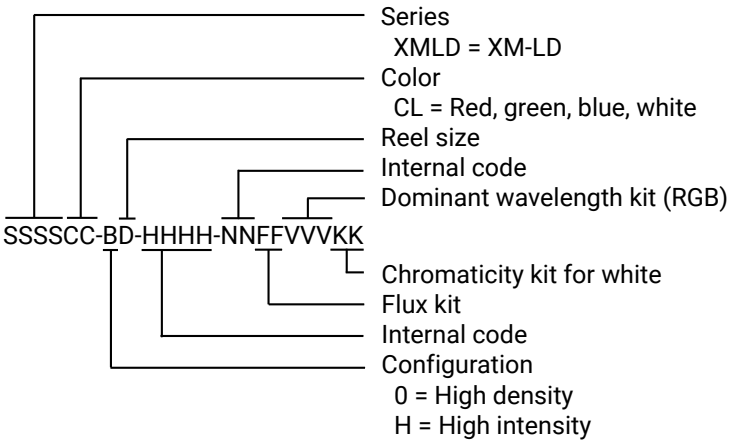

Bin Code

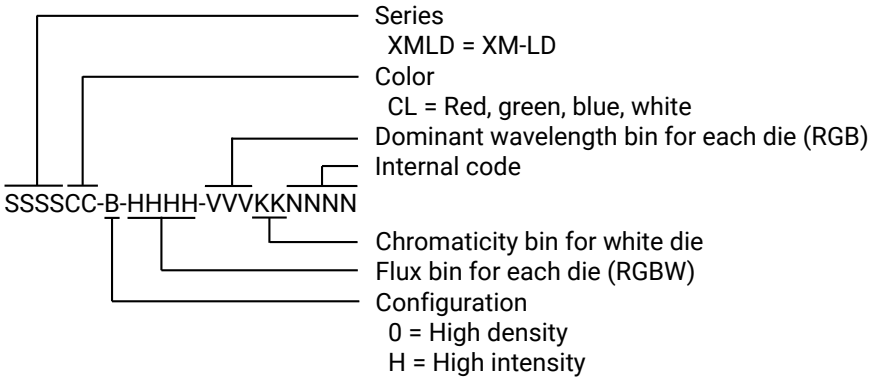

© 2022 Cree LED. The information in this document is subject to change without notice. Cree®, XLamp®, XML®, and the Cree logo are registered trademarks, and the Cree LED logo is a trademark, of Cree LED. UL® and the UL logo are registered trademarks of UL LLC.

PERFORMANCE GROUPS – LUMINOUS FLUX

Each LED die in the XLamp XM-L Color Gen 2 LED is tested individually for luminous flux and placed into one of the following luminous-flux groups.

High Density

Color	Flux Code	Minimum Luminous Flux (lm) @ 350 mA	Maximum Luminous Flux (lm) @ 350 mA)
Red	G	60	100
	H	100	140
Green	N	140	180
	P	180	220
Blue	B	18	45
	C	45	70
White	3	100	120
	4	120	140
	5	140	160
	6	160	180

High Intensity

Color	Flux Code	Minimum Luminous Flux (lm) @ 350 mA	Maximum Luminous Flux (lm) @ 350 mA)
Red	F	50	100
	G	60	100
	H	100	140
Green	M	130	180
	N	140	180
	P	180	220
Blue	A	14	45
	B	18	45
	C	45	70
White	2	80	100
	3	100	120
	4	120	140
	5	140	160

- Flux and chromaticity are measured with each LED die connected to independent drive circuits at 350 mA.

© 2022 Cree LED. The information in this document is subject to change without notice. Cree®, XLamp®, XML®, and the Cree logo are registered trademarks, and the Cree LED logo is a trademark, of Cree LED. UL® and the UL logo are registered trademarks of UL LLC.

PERFORMANCE GROUPS – CHROMATICITY (I_F = 350 mA PER LED DIE)

The white LED die in the XLamp XM-L Color Gen 2 LED is individually tested for chromaticity at 350 mA and placed into one of the regions defined by the bounding coordinates shown below.

Region	x	y	Region	x	y	Region	x	y	Region	x	y	Region	x	y
01	0.2980	0.2880	02	0.3010	0.3420	03	0.3100	0.3000	E5	0.3670	0.3578	E7	0.4147	0.3814
	0.2870	0.3210		0.3080	0.3093		0.3080	0.3093		0.3736	0.3874		0.4299	0.4165
	0.3010	0.3420		0.3290	0.3300		0.3290	0.3300		0.4006	0.4044		0.4562	0.4260
	0.3100	0.3000		0.3290	0.3690		0.3290	0.3180		0.3898	0.3716		0.4373	0.3893

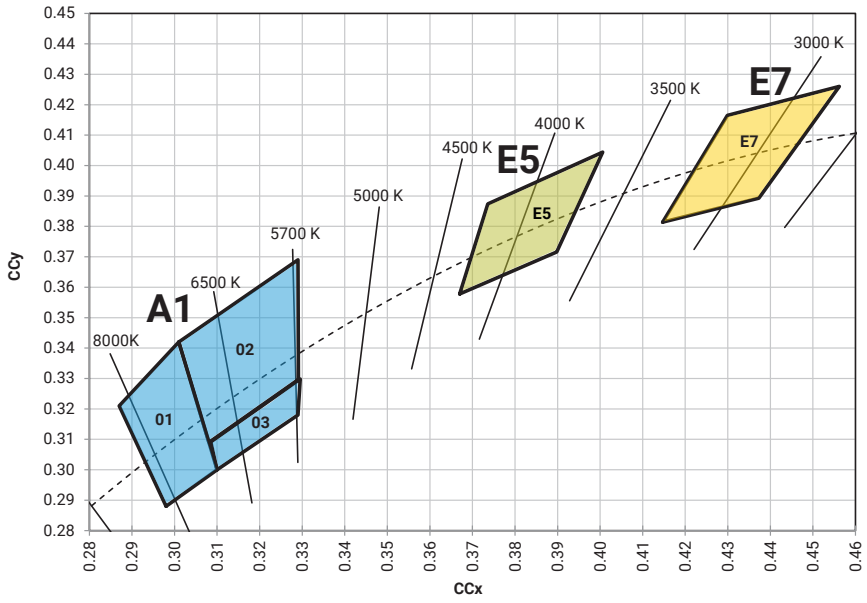

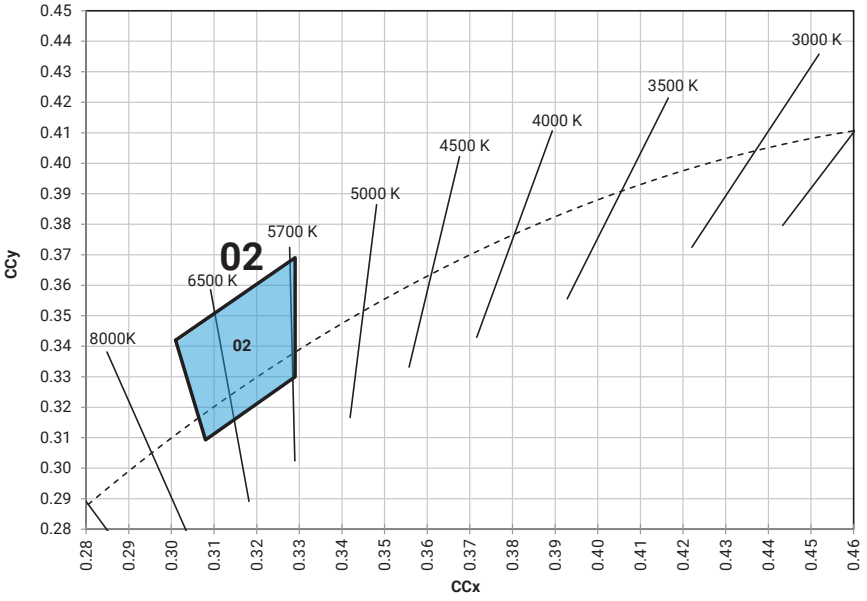

© 2022 Cree LED. The information in this document is subject to change without notice. Cree®, XLamp®, XML®, and the Cree logo are registered trademarks, and the Cree LED logo is a trademark, of Cree LED. UL® and the UL logo are registered trademarks of UL LLC.

PERFORMANCE GROUPS – CHROMATICITY (I_F = 350 mA PER LED DIE) - CONTINUED

Region	x	y	Region	x	y
WM	0.295	0.297	WC	0.316	0.332
	0.308	0.311		0.317	0.319
	0.310	0.300		0.308	0.311
	0.298	0.288		0.306	0.322
WB	0.306	0.322	WF	0.314	0.355
	0.308	0.311		0.316	0.332
	0.295	0.297		0.306	0.322
	0.292	0.306		0.301	0.342
WE	0.301	0.342	WD	0.329	0.345
	0.306	0.322		0.329	0.330
	0.292	0.306		0.317	0.319
	0.287	0.321		0.316	0.332
WN	0.308	0.311	WG	0.329	0.369
	0.317	0.319		0.329	0.345
	0.318	0.308		0.316	0.332
	0.310	0.300		0.314	0.355

Region	x	y	Region	x	y	Region	x	y	Region	x	y
5A	0.3670	0.3578	5B	0.3702	0.3722	5C	0.3825	0.3798	5D	0.3783	0.3646
	0.3702	0.3722		0.3736	0.3874		0.3869	0.3958		0.3825	0.3798
	0.3825	0.3798		0.3869	0.3958		0.4006	0.4044		0.3950	0.3875
	0.3783	0.3646		0.3825	0.3798		0.3950	0.3875		0.3898	0.3716
7A	0.4147	0.3814	7B	0.4221	0.3984	7C	0.4342	0.4028	7D	0.4259	0.3853
	0.4221	0.3984		0.4299	0.4165		0.4430	0.4212		0.4342	0.4028
	0.4342	0.4028		0.4430	0.4212		0.4562	0.4260		0.4465	0.4071
	0.4259	0.3853		0.4342	0.4028		0.4465	0.4071		0.4373	0.3893

© 2022 Cree LED. The information in this document is subject to change without notice. Cree®, XLamp®, XML®, and the Cree logo are registered trademarks, and the Cree LED logo is a trademark, of Cree LED. UL® and the UL logo are registered trademarks of UL LLC.

PERFORMANCE GROUPS – CHROMATICITY (I_F = 350 mA PER LED DIE) - CONTINUED

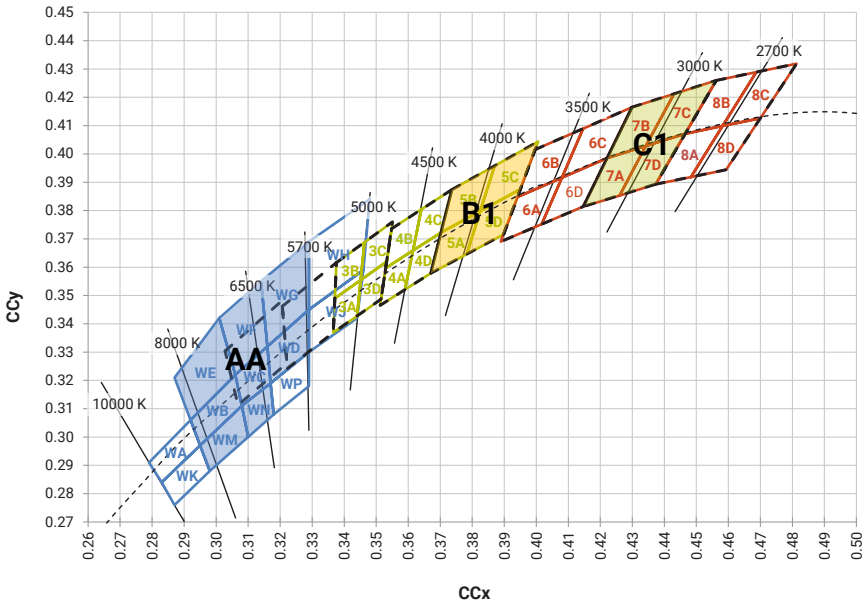

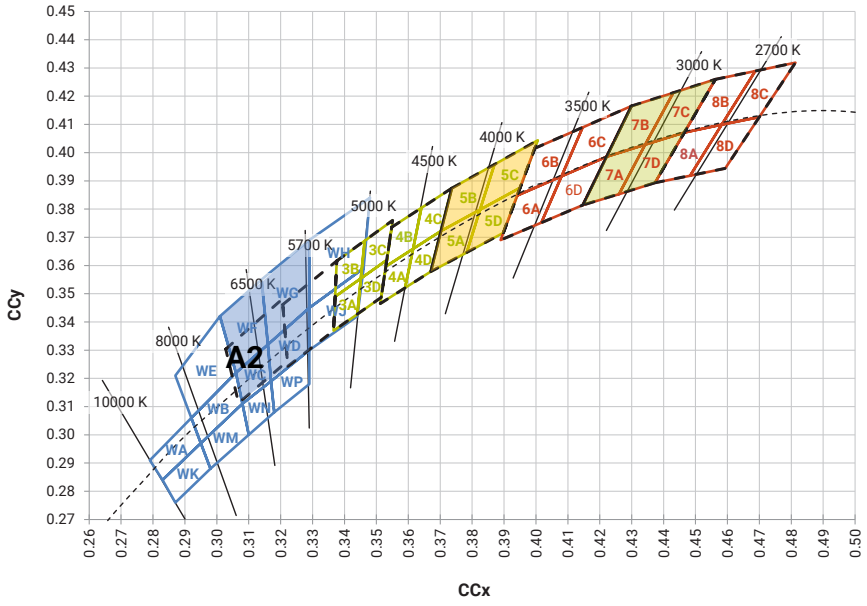

© 2022 Cree LED. The information in this document is subject to change without notice. Cree®, XLamp®, XML®, and the Cree logo are registered trademarks, and the Cree LED logo is a trademark, of Cree LED. UL® and the UL logo are registered trademarks of UL LLC.

PERFORMANCE GROUPS – DOMINANT WAVELENGTH

The red, green and blue LED dies in the XLamp XM-L Color Gen 2 LED are tested individually for dominant wavelength (DWL) and sorted into one of the DWL bins defined below.

Color	DWL Group	Minimum DWL @ 350 mA	Maximum DWL @ 350 mA
Red	A	620	630
Green	2	520	525
	3	525	530
	4	530	535
Blue	K	450	455
	L	455	460
	M	460	465

PERFORMANCE GROUPS – CHROMATICITY BINS

The following table lists standard kit numbers and chromaticity bins. Kit numbers completely describe an order code's color or chromaticity bins and luminous flux range. For other flux and chromaticity combinations, contact Cree LED or an authorized distributor.

Color	Chromaticity Bins	Kit Code
Cool White	01, 02, 03	AAAA1
	02	AAA02
	WC, WD, WF, WG, WB, WE, WM, WN	AAAAA
	WC, WD, WF, WG	AAAA2
Neutral White	E5	AAAE5
	5A, 5B, 5C, 5D	AAAB1
Warm White	E7	AAAE7
	7A, 7B, 7C, 7D	AAAC1

- XLamp XM-L Color Gen 2 LED order codes specify only a minimum flux bin and not a maximum. Cree LED may ship reels in flux bins higher than the minimum specified by the order code without advance notice. Shipments will always adhere to the chromaticity or DWL bin restrictions specified by the order code.

© 2022 Cree LED. The information in this document is subject to change without notice. Cree®, XLamp®, XML®, and the Cree logo are registered trademarks, and the Cree LED logo is a trademark, of Cree LED. UL® and the UL logo are registered trademarks of UL LLC.

REFLOW SOLDERING CHARACTERISTICS

In testing, Cree LED has found XLamp XM-L Color Gen 2 LEDs to be compatible with JEDEC J-STD-020C, using the parameters listed below. As a general guideline, Cree LED recommends that users follow the recommended soldering profile provided by the manufacturer of the solder paste used, and therefore it is the lamp or luminaire manufacturer's responsibility to determine applicable soldering requirements.

Note that this general guideline may not apply to all PCB designs and configurations of reflow soldering equipment.

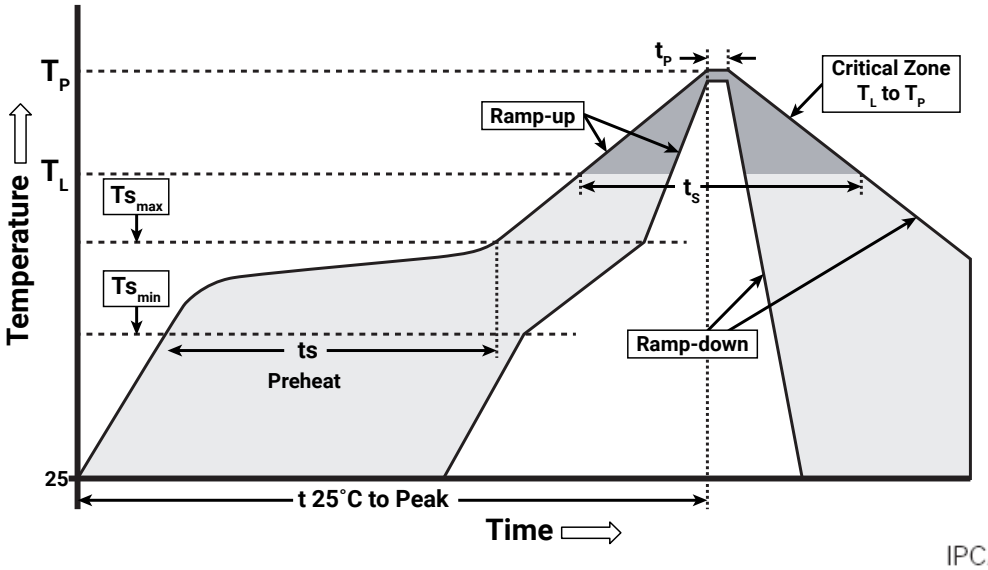

IPC/JEDEC J-STD-020C

Profile Feature	Lead-Free Solder
Average Ramp-Up Rate (Ts_{max} to T_p)	1.2 °C/second
Preheat: Temperature Min (Ts_{min})	120 °C
Preheat: Temperature Max (Ts_{max})	170 °C
Preheat: Time (ts_{min} to ts_{max})	65-150 seconds
Time Maintained Above: Temperature (T_L)	217 °C
Time Maintained Above: Time (t_L)	45-90 seconds
Peak/Classification Temperature (Tp)	235 - 245 °C
Time Within 5 °C of Actual Peak Temperature (tp)	20-40 seconds
Ramp-Down Rate	1 - 6 °C/second
Time 25 °C to Peak Temperature	4 minutes max.

Note: All temperatures refer to the topside of the package, measured on the package body surface.

© 2022 Cree LED. The information in this document is subject to change without notice. Cree®, XLamp®, XML®, and the Cree logo are registered trademarks, and the Cree LED logo is a trademark, of Cree LED. UL® and the UL logo are registered trademarks of UL LLC.

NOTES

Measurements

The luminous flux, radiant power, chromaticity, forward voltage and CRI measurements in this document are binning specifications only and solely represent product measurements as of the date of shipment. These measurements will change over time based on a number of factors that are not within Cree LED's control and are not intended or provided as operational specifications for the products. Calculated values are provided for informational purposes only and are not intended or provided as specifications.

Pre-Release Qualification Testing

Please read the LED Reliability Overview for details of the qualification process Cree LED applies to ensure long-term reliability for XLamp LEDs and details of Cree LED's pre-release qualification testing for XLamp LEDs.

RoHS Compliance

The levels of RoHS restricted materials in this product are below the maximum concentration values (also referred to as the threshold limits) permitted for such substances, or are used in an exempted application, in accordance with EU Directive 2011/65/EC (RoHS2), as implemented January 2, 2013. RoHS Declarations for this product can be obtained from your Cree LED representative or from the Product Ecology section of the Cree LED website.

REACH Compliance

REACH substances of very high concern (SVHCs) information is available for this product. Since the European Chemical Agency (ECHA) has published notice of their intent to frequently revise the SVHC listing for the foreseeable future, please contact a Cree LED representative to insure you get the most up-to-date REACH SVHC Declaration. REACH banned substance information (REACH Article 67) is also available upon request.

UL® Recognized Component

This product meets the requirements to be considered a UL Recognized Component with Level 4 enclosure consideration. The LED package or a portion thereof has been investigated as a fire and electrical enclosure per ANSI/UL 8750.

© 2022 Cree LED. The information in this document is subject to change without notice. Cree®, XLamp®, XML®, and the Cree logo are registered trademarks, and the Cree LED logo is a trademark, of Cree LED. UL® and the UL logo are registered trademarks of UL LLC.

MECHANICAL DIMENSIONS

Thermal vias, if present, are not shown on these drawings.

All measurements are ±.13 mm unless otherwise indicated.

High Density

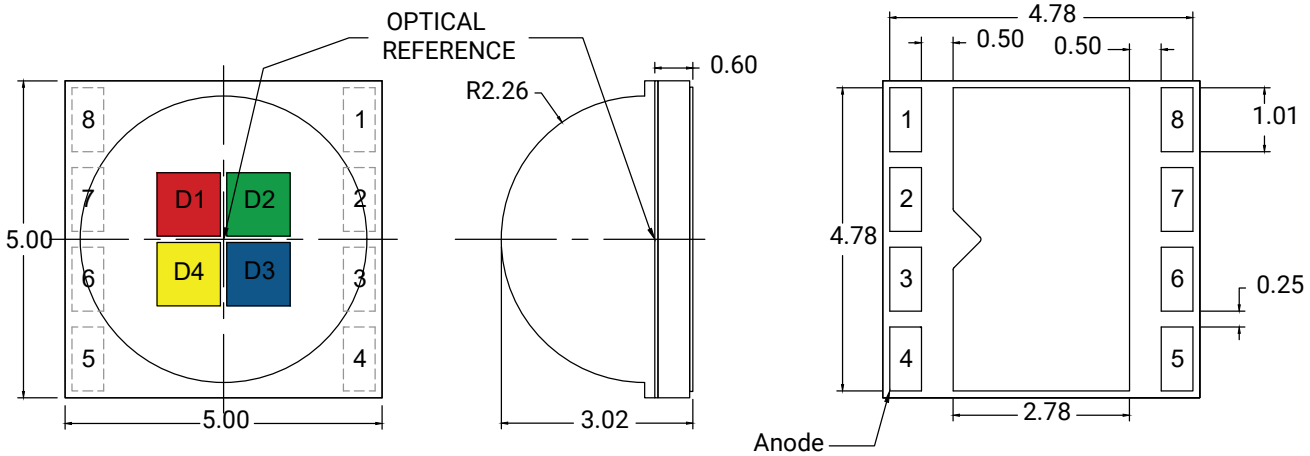

Top View **Side View** **Bottom View**

High Intensity

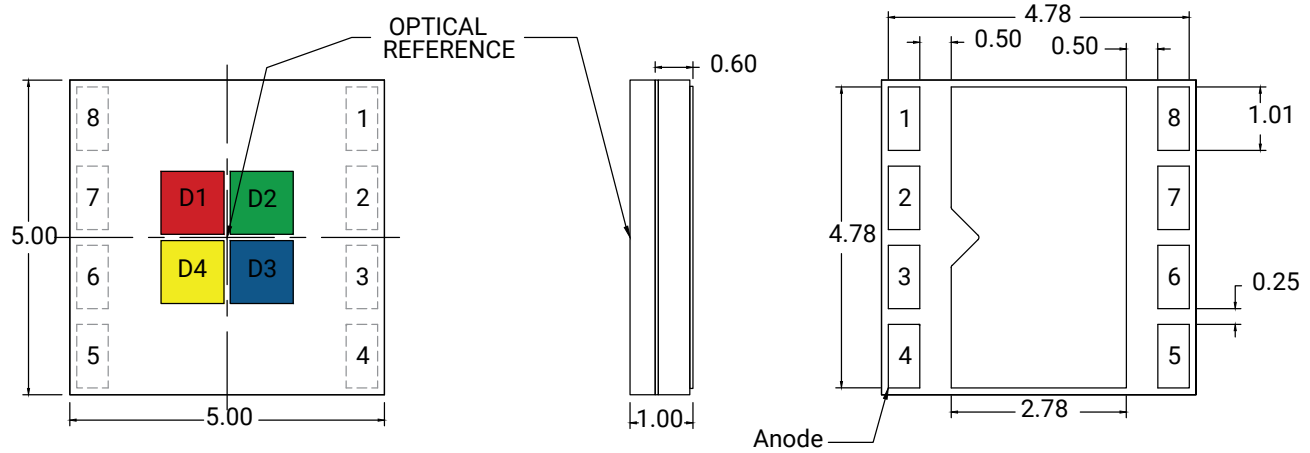

Top View **Side View** **Bottom View**

© 2022 Cree LED. The information in this document is subject to change without notice. Cree®, XLamp®, XML®, and the Cree logo are registered trademarks, and the Cree LED logo is a trademark, of Cree LED. UL® and the UL logo are registered trademarks of UL LLC.

MECHANICAL DIMENSIONS - CONTINUED

High Density & High Intensity

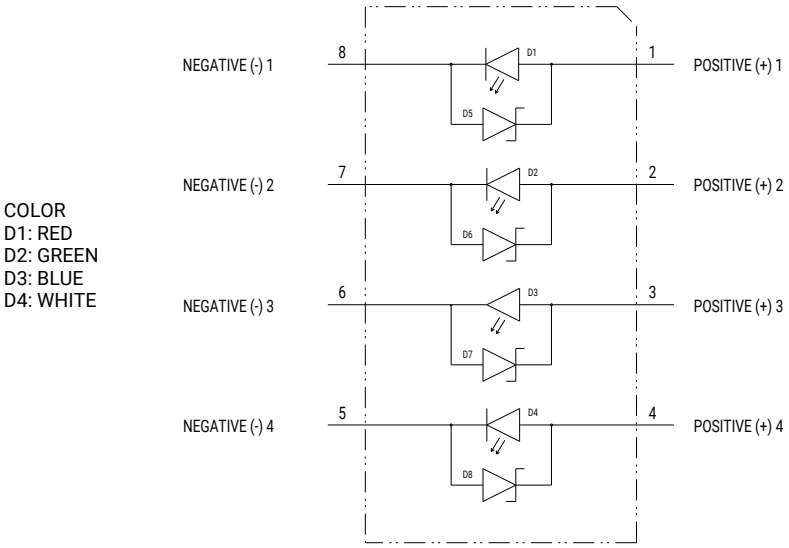

COLOR
D1: RED
D2: GREEN
D3: BLUE
D4: WHITE

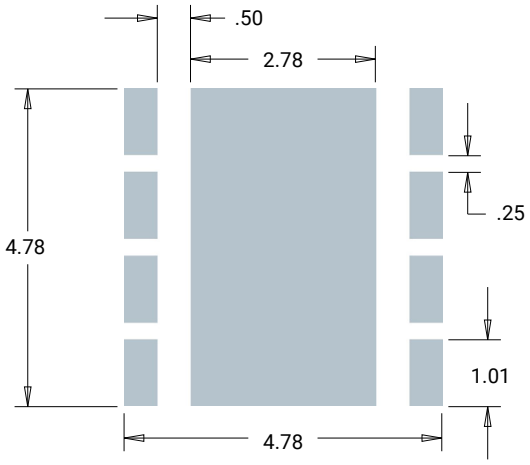

Recommended PCB Solder Pad

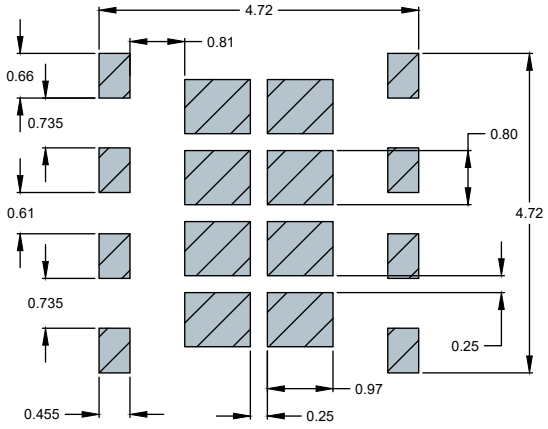

Recommended Stencil Pattern (Shaded Area Is Open)

© 2022 Cree LED. The information in this document is subject to change without notice. Cree®, XLamp®, XML®, and the Cree logo are registered trademarks, and the Cree LED logo is a trademark, of Cree LED. UL® and the UL logo are registered trademarks of UL LLC.

TAPE AND REEL

All Cree LED carrier tapes conform to EIA-481D, Automated Component Handling Systems Standard.

All dimensions in mm [in.].

High Density

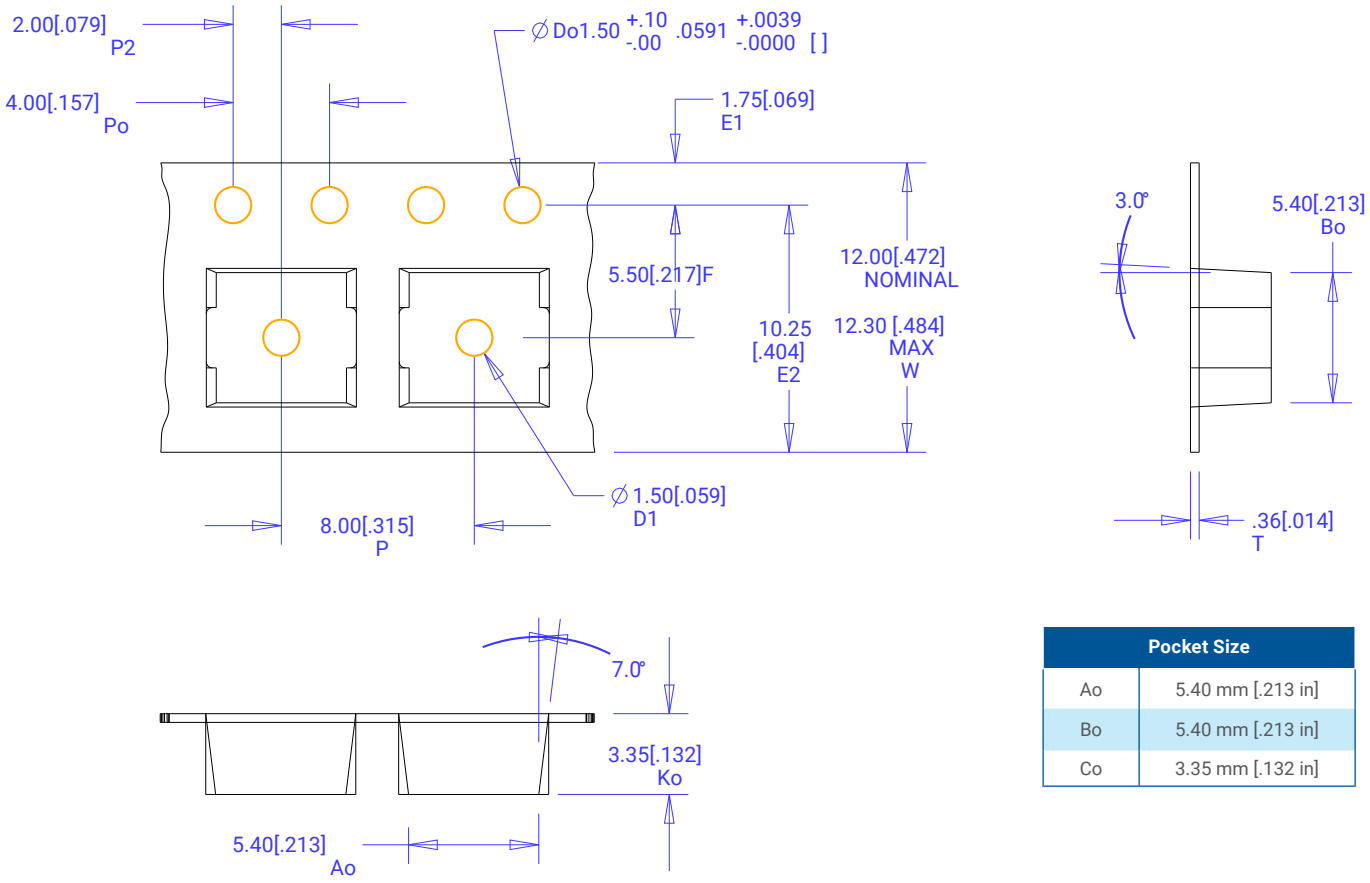

Pocket Size	
Ao	5.40 mm [.213 in]
Bo	5.40 mm [.213 in]
Co	3.35 mm [.132 in]

© 2022 Cree LED. The information in this document is subject to change without notice. Cree®, XLamp®, XML®, and the Cree logo are registered trademarks, and the Cree LED logo is a trademark, of Cree LED. UL® and the UL logo are registered trademarks of UL LLC.

TAPE AND REEL - CONTINUED

High Intensity

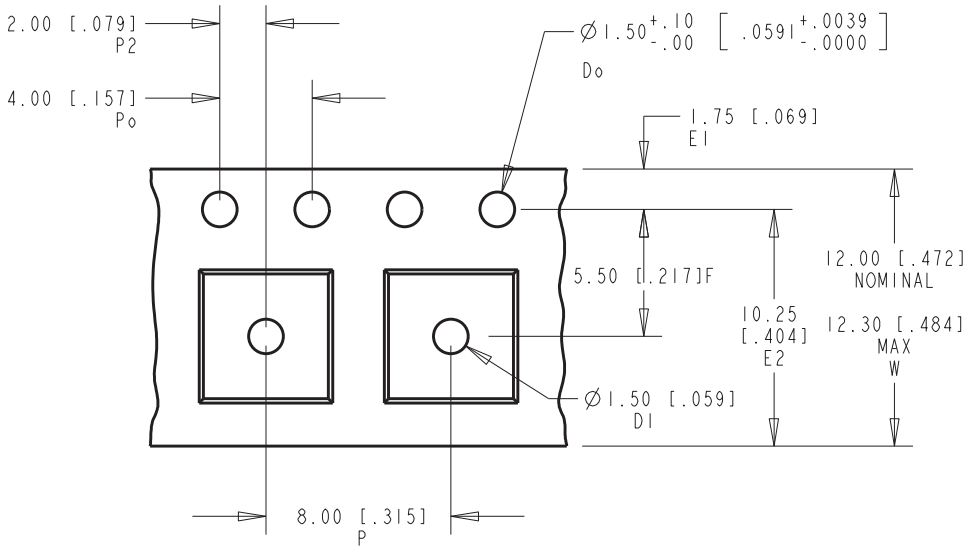

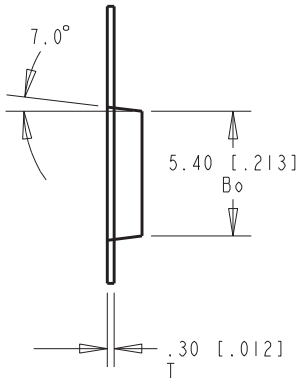

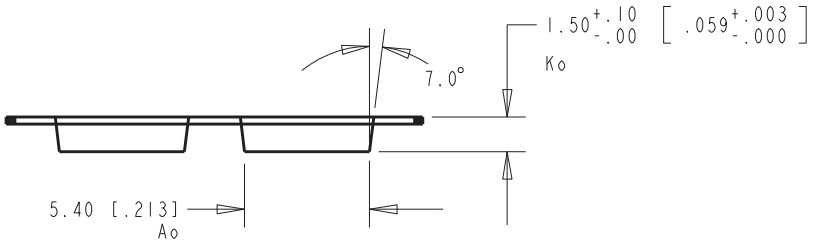

Pocket Size	
Ao	5.40 mm [.213 in]
Bo	5.40 mm [.213 in]
Co	1.50 mm [.069 in]

© 2022 Cree LED. The information in this document is subject to change without notice. Cree®, XLamp®, XML®, and the Cree logo are registered trademarks, and the Cree LED logo is a trademark, of Cree LED. UL® and the UL logo are registered trademarks of UL LLC.

TAPE AND REEL - CONTINUED

High Density & High Intensity

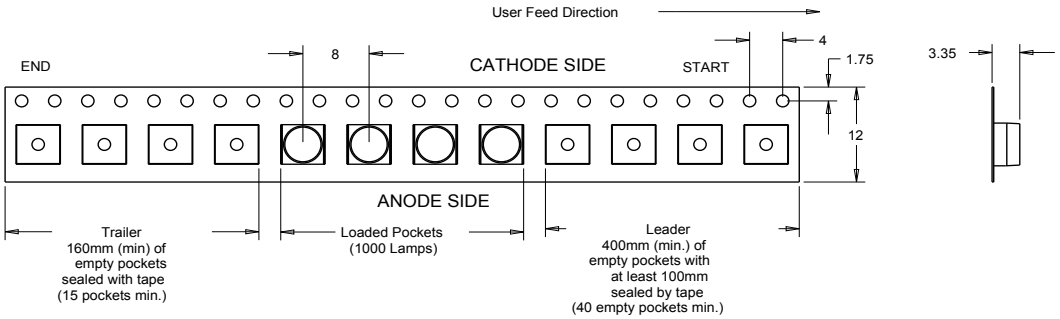

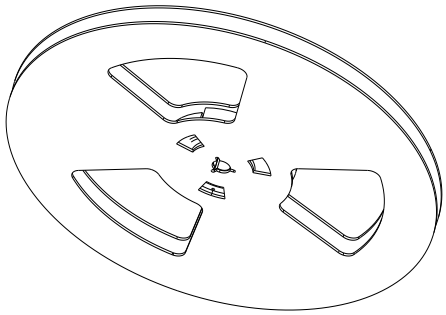

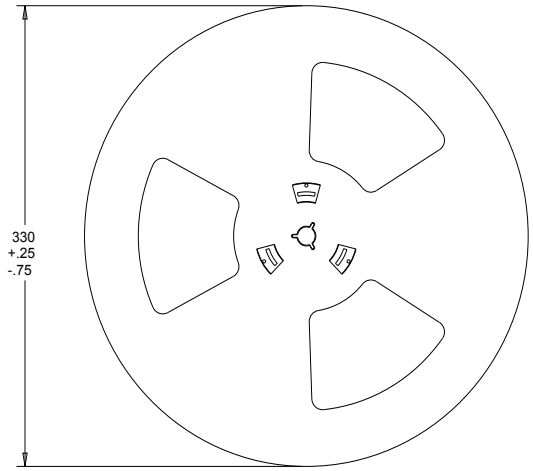

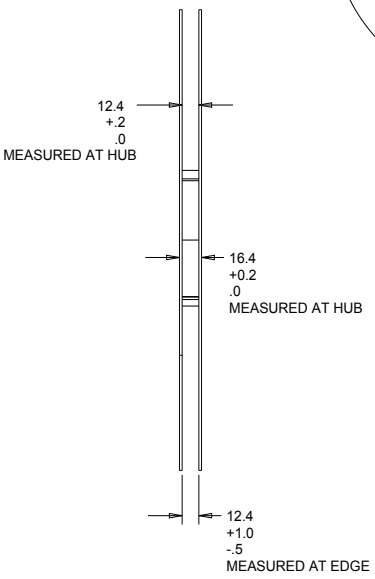

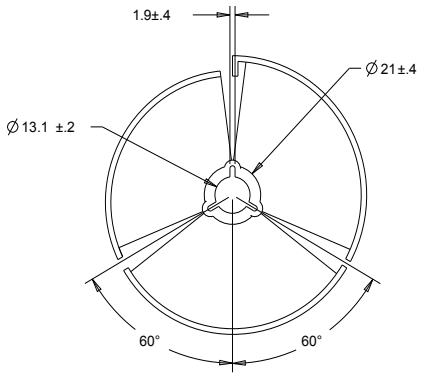

© 2022 Cree LED. The information in this document is subject to change without notice. Cree®, XLamp®, XML®, and the Cree logo are registered trademarks, and the Cree LED logo is a trademark, of Cree LED. UL® and the UL logo are registered trademarks of UL LLC.

PACKAGING

Unpackaged Reel

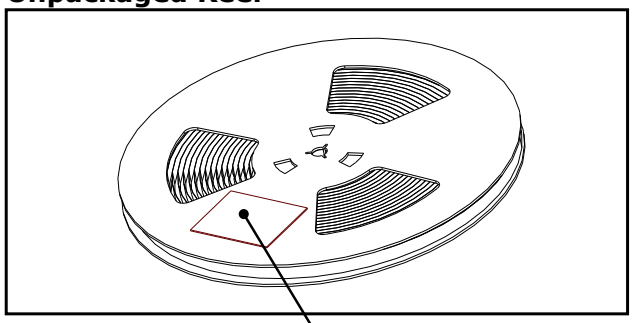

Packaged Reel

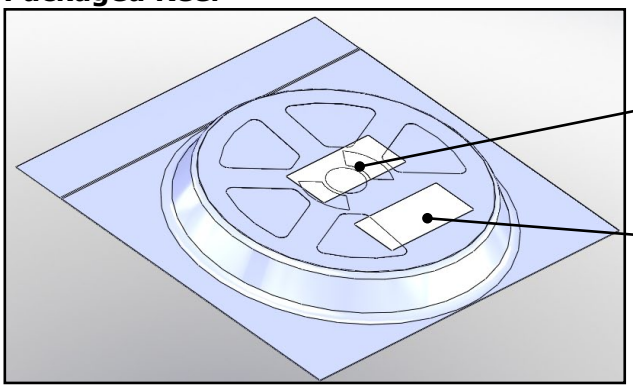

Boxed Reel

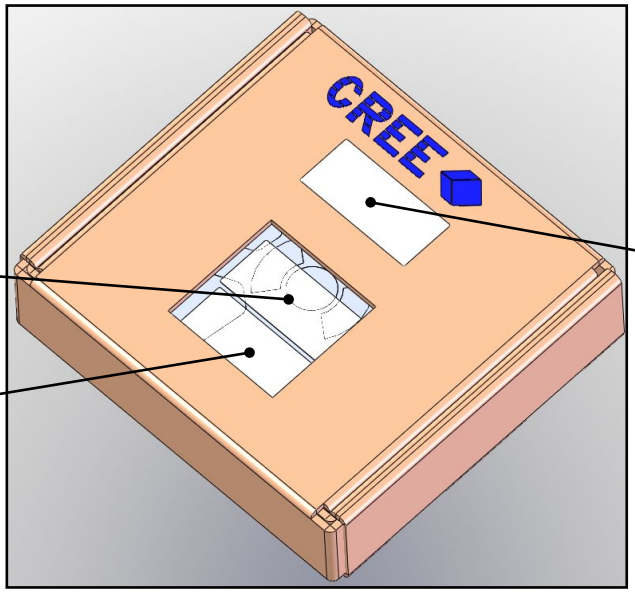

© 2022 Cree LED. The information in this document is subject to change without notice. Cree®, XLamp®, XML®, and the Cree logo are registered trademarks, and the Cree LED logo is a trademark, of Cree LED. UL® and the UL logo are registered trademarks of UL LLC.