CUI DEVICES

MODEL: CPT-1625-80-SMT-TR | **DESCRIPTION:** PIEZO BUZZER TRANSDUCER

FEATURES

- surface mount
- SPL 80 dB
- piezo
- externally driven

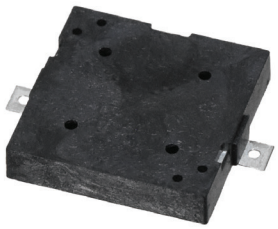

RoHS

SPECIFICATIONS

parameter	conditions/description	min	typ	max	units
rated voltage	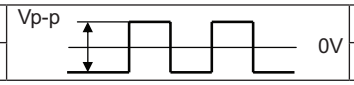		5		Vp-p
operating voltage		1		25	Vp-p
current consumption	at rated voltage, 4,100 Hz, ½ duty square wave			3	mA
rated frequency			4,100		Hz
sound pressure level	at 10 cm, rated voltage, 4,100 Hz, ½ duty square wave	80			dB
electrostatic capacitance	at 120 Hz	11,200	16,000	20,800	pF
dimensions	13.0 x 13.0 x 2.5				mm
weight			0.5		g
material	LCP				
terminal	surface mount (brass with tin plating)				
operating temperature		-40		85	°C
storage temperature		-40		85	°C
RoHS	yes				

Notes: 1. All specifications measured at 25±3°C, humidity at 60~70%, under 86~106 kPa pressure, unless otherwise noted.

SOLDERABILITY

parameter	conditions/description	min	typ	max	units
reel storage	at relative humidity <60%			25	°C
reflow soldering[2]	see recommended reflow soldering profile			260	°C
drying conditions[3]	bake at 40°C for 24 hours				

Note: 2. It is recommended to reflow solder within 48 hours from opening vacuum packaging at a temperature <30°C & relative humidity <60%.
3. When out of packaging for more than 48 hours.

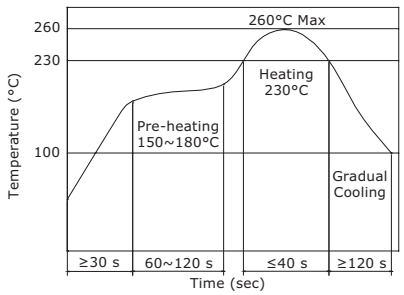

MECHANICAL DRAWING

units: mm
tolerance: ±0.5 mm

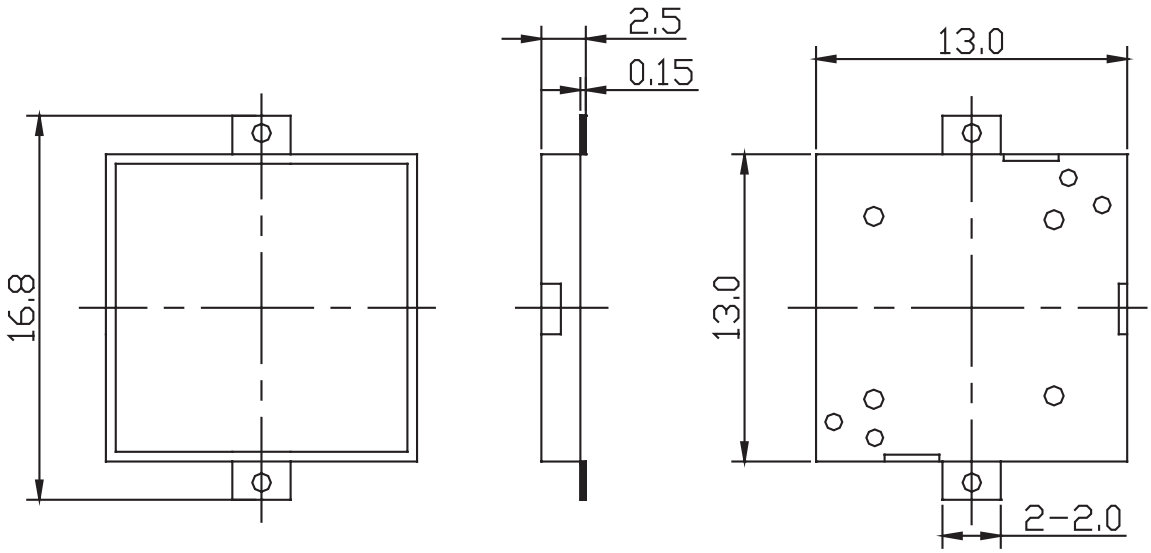

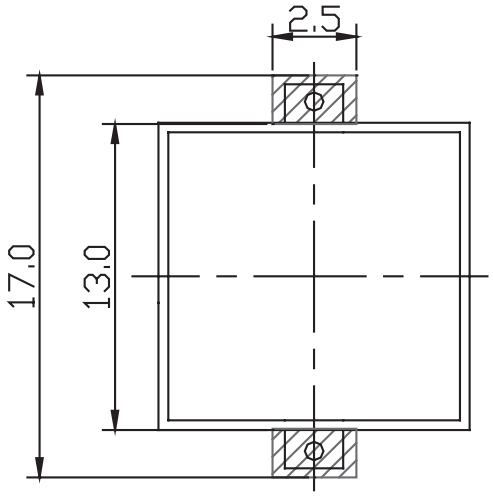

Recommended PCB Layout
Top View

FREQUENCY RESPONSE CURVE

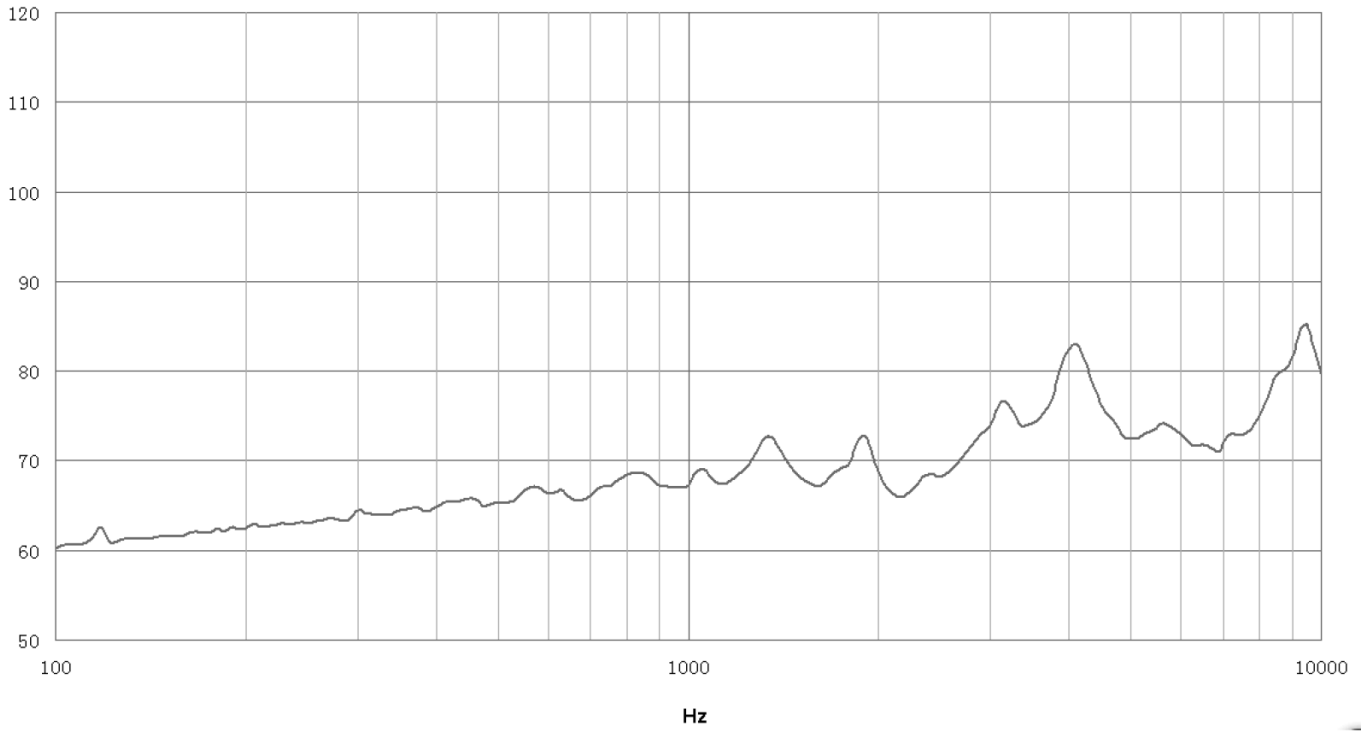

APPLICATION CIRCUIT

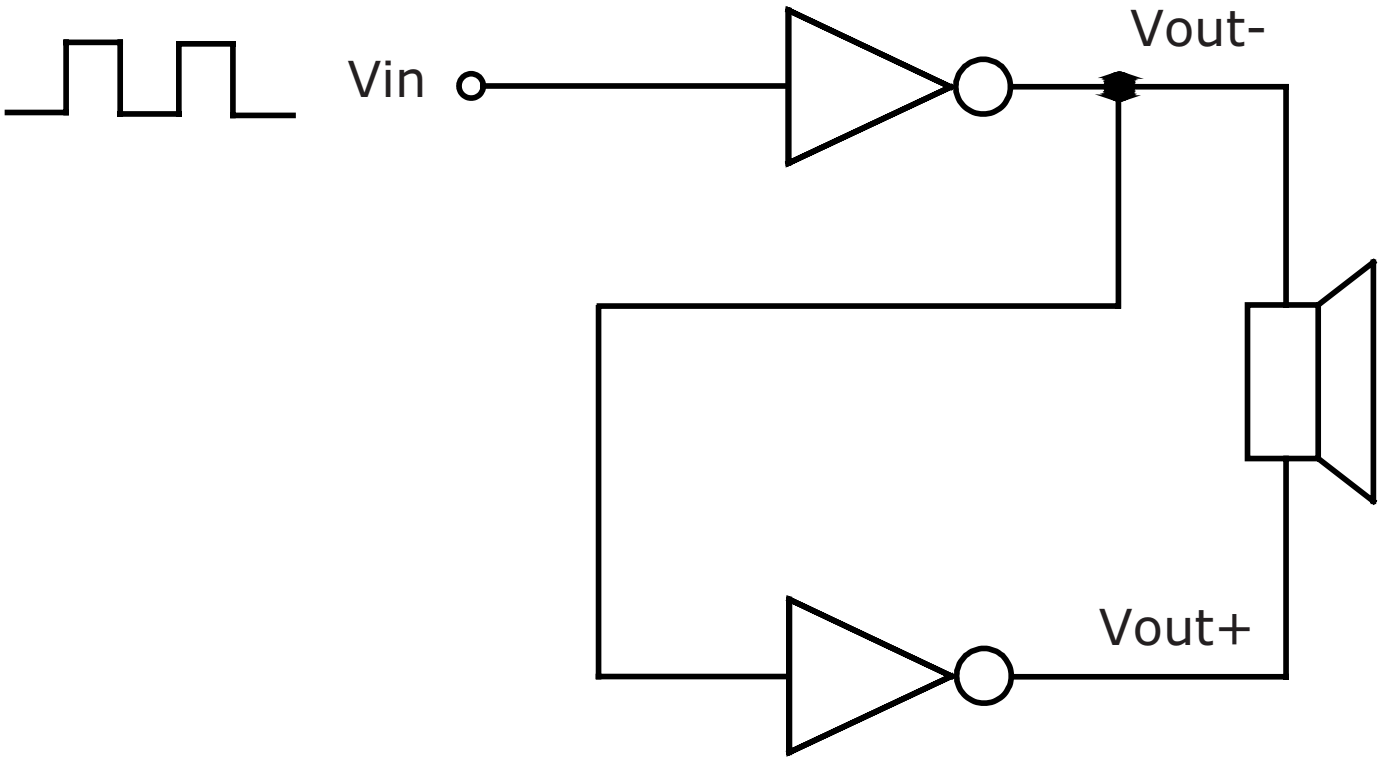

PACKAGING

units: mm

Reel Size: Ø330 mm
Reel QTY: 1,000 pcs per reel
Carton Size: 350 x 350 x 205 mm
Carton QTY: 5,000 pcs per carton

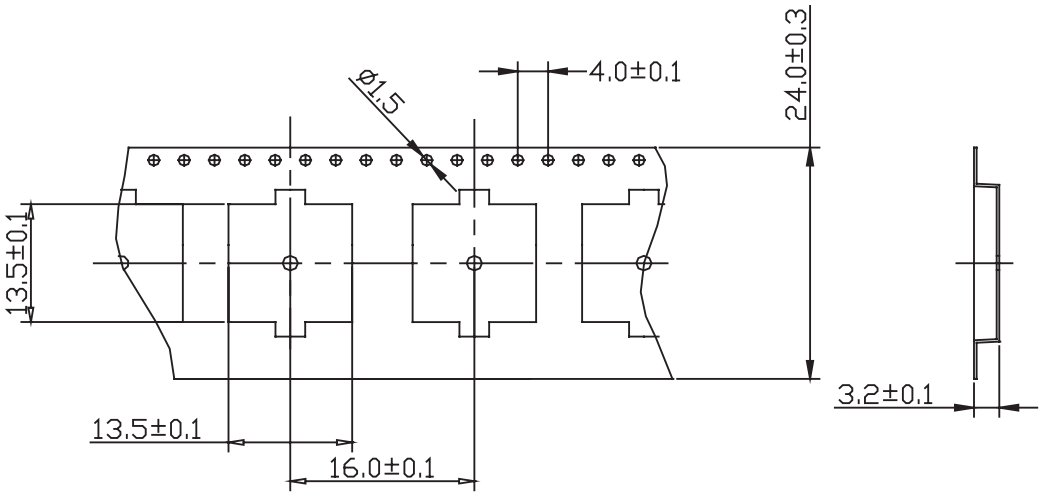

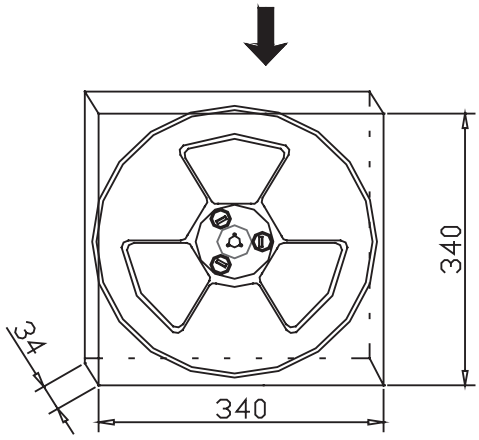

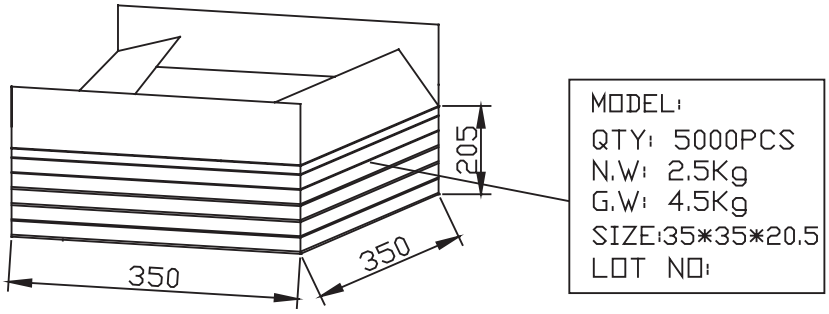

REVISION HISTORY

rev.	description	date
1.0	initial release	07/15/2019
1.01	brand update	01/03/2020

The revision history provided is for informational purposes only and is believed to be accurate.

CUI DEVICES

CUI Devices offers a one (1) year limited warranty. Complete warranty information is listed on our website.

CUI Devices reserves the right to make changes to the product at any time without notice. Information provided by CUI Devices is believed to be accurate and reliable. However, no responsibility is assumed by CUI Devices for its use, nor for any infringements of patents or other rights of third parties which may result from its use.

CUI Devices products are not authorized or warranted for use as critical components in equipment that requires an extremely high level of reliability. A critical component is any component of a life support device or system whose failure to perform can be reasonably expected to cause the failure of the life support device or system, or to affect its safety or effectiveness.

cuidevices.com