REVISIONS					
REV	ECO	DESCRIPTION	DATE	BY	APPR
A1	-	RELEASE NEW DRAWING	15JUN18	SULLEN	TOMMY
A2	-	REVISED DRAWING	10JUL20	JHEAD	DH

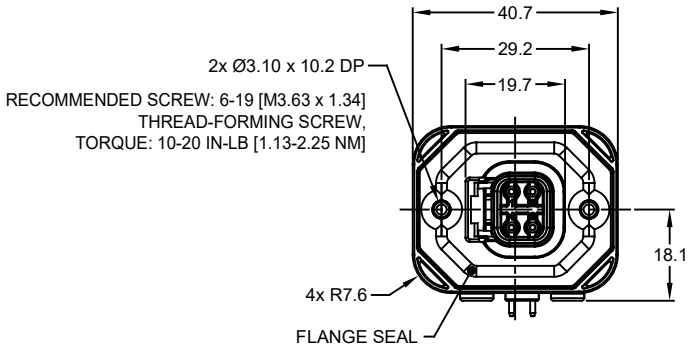

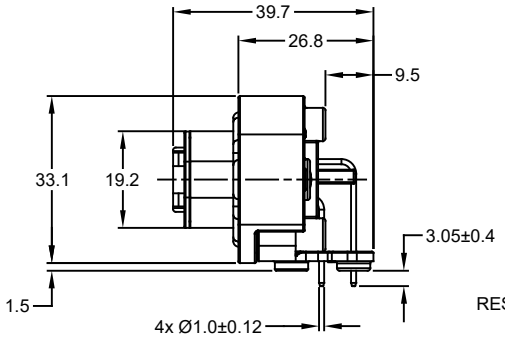

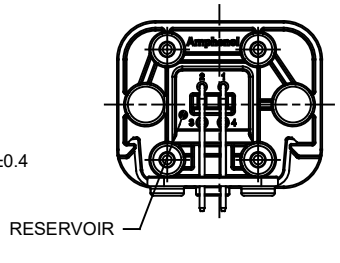

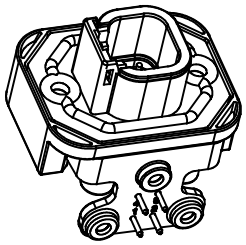

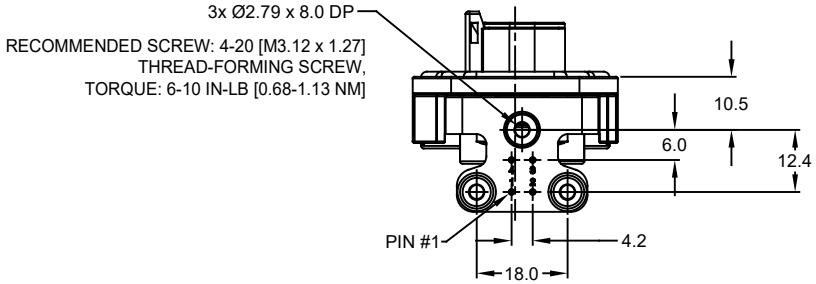

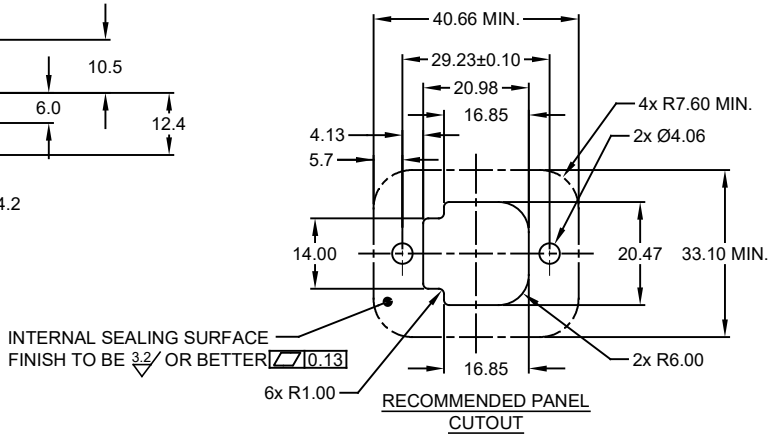

RECOMMENDED PANEL CUTOUT

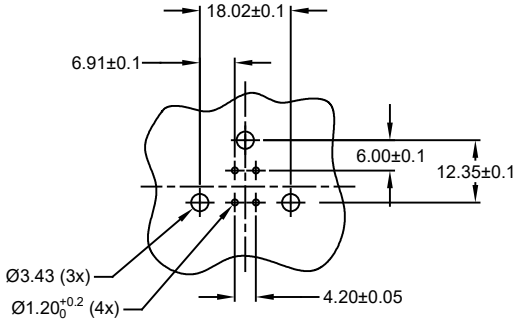

RECOMMENDED PCB LAYOUT
VIEW FROM COMPONENTS SIDE OF PCB

NOTES: UNLESS OTHERWISE SPECIFIED

1. MATERIAL:
   HOUSING: THERMOPLASTIC, GREY
   SEAL: SILICONE RUBBER
   CONTACT: COPPER ALLOY

2. MODIFICATIONS: FLANGE; RA PCB MOUNT

3. SPECIFICATIONS:
   3.1 CURRENT RATING: 7.5 AMPS
   3.2 OPERATING TEMPERATURE: -55°C TO +125°C
   3.3 DIELECTRIC WITHSTANDING VOLTAGE: LESS THAN 2 MILLIAMPS CURRENT LEAKAGE @ 1500 VOLTS AC.
   3.4 INSULATION RESISTANCE: 1000 MEGOHMS MIN @ 25°C
   3.5 MOISTURE RESISTANCE: IP67 (MATED CONDITION)
   3.6 MATING CYCLE DURABILITY: 100 CYCLES
   3.7 RoHS COMPLIANT

4. MATING PART: ATM06-4S* (* = ALL MODIFICATIONS)

5. ALL DIMENSIONS ARE FOR REFERENCE USE ONLY

6. POTTED CONNECTORS SPECIFIED FOR UP TO 5 P.S.I. APPLICATIONS.

ATM13-4P-BMXX VARIANTS		
CONTACT PLATING	POTTING OR NOT IN RESERVOIR	PART NUMBER
GOLD	NO POTTING	ATM13-4P-BM01
GOLD	POTTING	ATM13-4P-BM02
TIN	NO POTTING	ATM13-4P-BM03
TIN	POTTING	ATM13-4P-BM04

	ATM13-4P-BMXX		
	PART NUMBER	DESCRIPTION	ITEM
QUANTITY	MATERIALS LIST		

UNLESS OTHERWISE SPECIFIED
1) All dimensions are in metric(mm).
2) Tolerances are as follows:
1 PL DEC ±0.30
2 PL DEC ±0.15
3 PL DEC ±0.08
Fractions ±1/64
Angles ±1°
3) Note reference = X

MATERIAL SPECIFICATIONS:

PROCESS SPECIFICATIONS:

NEXT ASS'Y:

SIGNATURES		DATE
DRAWN:	SULLEN ZHANG	15JUN18
CHECKED:	ORION LI	15JUN18
ENGINEER:		
APPROVAL:	TOMMY XIE	15JUN18
CUSTOMER:		

THIS DRAWING IS SUPPLIED FOR INFORMATION ONLY. DESIGN FEATURES, SPECIFICATIONS AND PERFORMANCE DATA SHOWN HEREON ARE THE PROPERTY OF THE AMPHENOL CORPORATION. NO RIGHTS OF REPRODUCTION ARE IMPLIED. ALL DIMENSIONS ARE SUBJECT TO NORMAL MANUFACTURING VARIATIONS.

Amphenol

Sine Systems - www.amphenol-sine.com
44724 Morley Drive
Clinton Township, MI 48036

BOARDLOCK PCB MOUNT RECEPTACLE, 4 PIN, RA FLANGE, ATM SERIES

SIZE B | TYPE C- | DWG NO: ATM13-4P-BMXX | REVISION A2

SCALE: NONE | SHEET 1 OF 1

TITLE: PCB MOUNT RECEPTACLE, 4PIN, RA FLANGE, ATM SERIES
DWG NO: ATM13-4P-BMXX
REV: A2
SH: 1
OF: 1