UMFT232HPEV-S Sink Module

Datasheet

Version 1.0

Issue Date: 01-12-2021

Use of FTDI devices in life support and/or safety applications is entirely at the user's risk, and the user agrees to defend, indemnify and hold FTDI harmless from any and all damages, claims, suits or expense resulting from such use.

Future Technology Devices International Limited (FTDI)
Unit 1, 2 Seaward Place, Glasgow G41 1HH, United Kingdom
Tel.: +44 (0) 141 429 2777 Fax: + 44 (0) 141 429 2758
Web Site: https://ftdichip.com
Copyright © Future Technology Devices International Limited

Table of Contents

1 Introduction 3
1.1 Features 3
2 Typical Applications 4
2.1 Driver Support 4
2.2 USB Bridge Features 4
3 Electrical Details 5
3.1 Key Features 6
3.2 Power 6
3.3 GPIO 6
3.4 Connectors 6
3.5 Schematics 7
4 Power Delivery Functional Configuration 11
4.1 Sink 11
5 Mechanical Details 13
6 Contact Information 14
Appendix A – References 15
Document References 15
Acronyms and Abbreviations 15
Appendix B – List of Tables and Figures 16
List of Tables 16
List of Figures 16
Appendix C – Revision History 17

Copyright © Future Technology Devices International Limited

1 Introduction

UMFT232HPEV-S Sink Module Board is a high speed USB Type-C to Multipurpose UART/JTAG/SPI/I2C serial interface module with single Type-C™ USB PD port.

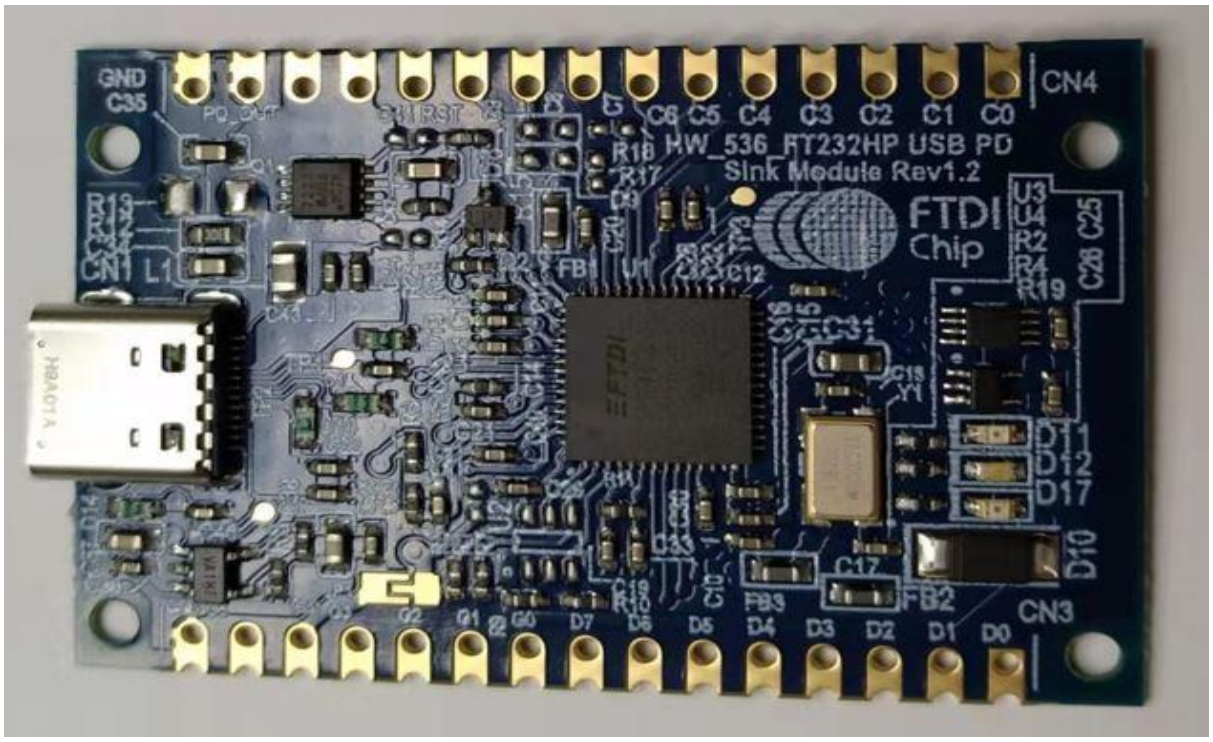

Figure 1 - UMFT232HPEV-S Sink Module

The module has 47mm x 32mm dimensions, with single Type-C power delivery port incorporated into it. The port serves only as a sink port. EEPROM is not mounted in this module, As such the port supports the following configuration:

- 5V power delivery object (PDO) profiles - as defined in revision 3.0 of the USB Power Delivery specification when connected to PD chargers.
- Offers USB data transmission with default USB power capability when connected to non PD PC host.

GPIO pins are used to provide indication via LEDs whether module is connected to PD charger or USB2.0 host as well as to control the load switch.

1.1 Features

1. Single Type-C™ USB PD sink only ports that support USB data communication which is USB 2.0 compliant
2. Supports bus-powered operation.
3. LED indicators for PWREN#, SUSPEND# signals (optional), System Power, 5V 3A profile and USB2.0 Vbus
4. Test points for core and CC voltages.

Copyright © Future Technology Devices International Limited

2 Typical Applications

- Rapid USB integration into existing electronic systems
- Prototyping platform for USB interface on new system
- USB Bridge with Type-C/PD3.0 (chargers and devices).
- Up to 15W power application delivery via USB PD and/or Type-C port.
- USB to multi-port JTAG, SPI and I2C interfaces
- USB to multi-port asynchronous serial interfaces

2.1 Driver Support

The FT232HP requires USB drivers (listed below), available free from https://www.ftdichip.com, which are used to make the FT232HP appear as a virtual COM port (VCP). This allows the user to communicate with the USB interface via a standard PC serial emulation port (for example TTY). Another FTDI USB driver, the D2XX driver, can also be used with application software to directly access the FT232HP through a DLL.

Royalty free VIRTUAL COM PORT (VCP) DRIVERS for…

- Windows 11 (Desktop 32,64-bit & Universal 64-bit)
- Windows 10 32,64-bit
- Windows 8/8.1 32,64-bit
- Windows 7 32,64-bit
- Windows Server 2008 and server 2012 R2
- Mac OS
- Linux 2.4 and greater

Royalty free D2XX *Direct* Drivers (USB Drivers + DLL S/W Interface)

- Windows 11 (Desktop 32,64-bit & Universal 64-bit)
- Windows 10 32,64-bit
- Windows 8/8.1 32,64-bit
- Windows 7 32,64-bit
- Windows Server 2008 and server 2012 R2
- Mac OS
- Linux 2.4 and greater
- Android(J2xx)

For driver installation, please refer to the installation guides on our website:
https://ftdichip.com/document/installation-guides/

2.2 USB Bridge Features

For information on USB Bridge features, please refer to FT233HP Datasheet.

Copyright © Future Technology Devices International Limited

3 Electrical Details

The UMFT232HPEV-S Sink Module Board is a 47mm by 32mm 4-layered printed circuit board.

The key features are labelled in Figure 2 and Figure 3 and are detailed in Section 3.1.

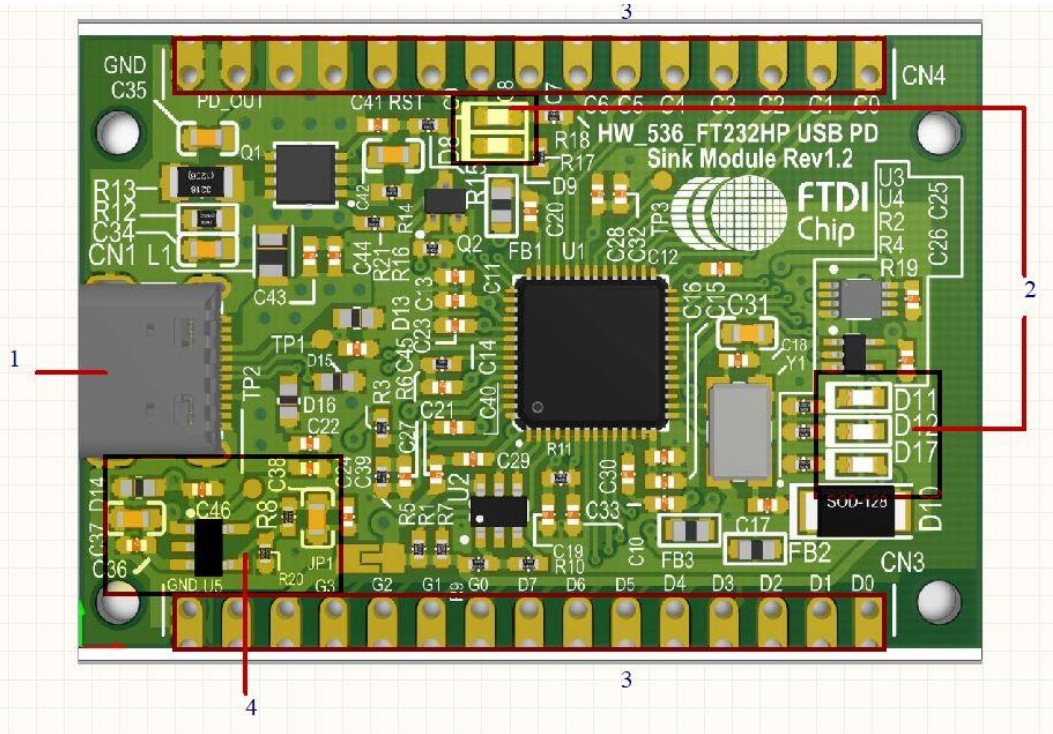

Figure 2 - UMFT232HPEV-S Sink Module – Top Board View

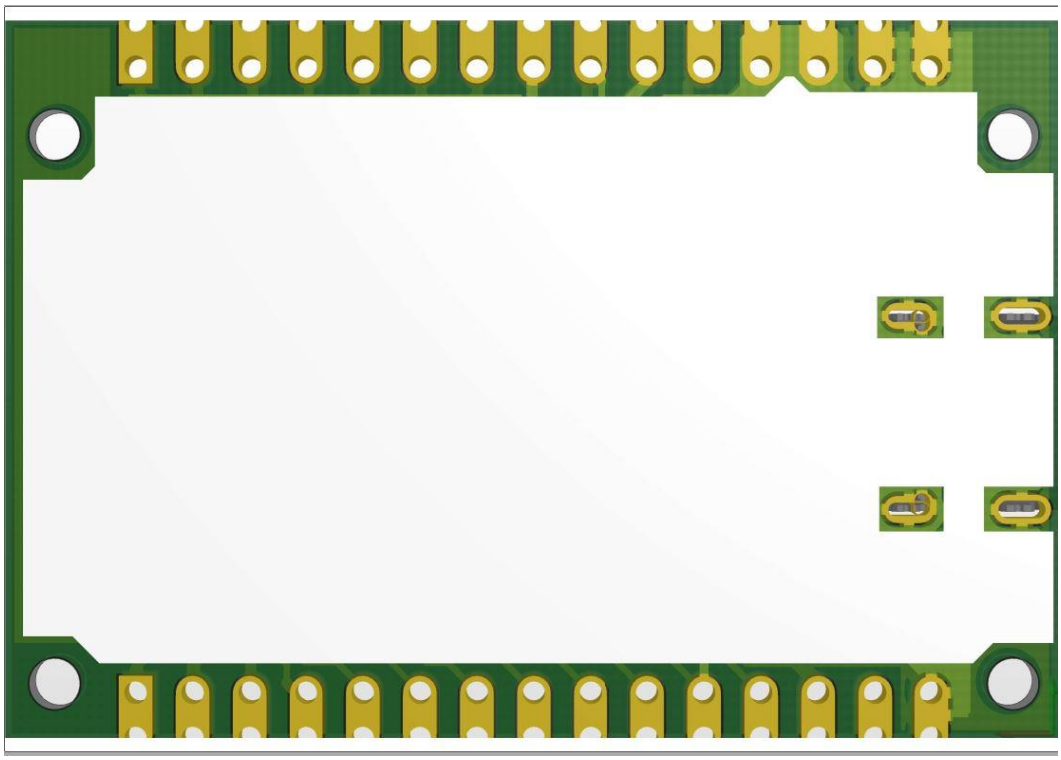

Figure 3 - UMFT232HPEV-S Sink Module – Bottom Board View

Copyright © Future Technology Devices International Limited

3.1 Key Features

1. Single PD USB Type-C sink only ports.
2. LEDs indication for the USB, Power Source and PDO profiles
3. Connector for functional interface
4. DC-DC converters for FT232HPQ and other circuits

3.2 Power

The UMFT232HPEV-S Sink Module board provides power source that is 3.46V for FT232HPQ and most other circuits on the board. The reason why 3.46V is needed for FT232HPQ is due to the addition of schottky diode between VCC_PD/PD1_Vconn and VCC33 to prevent CC leakage during initial attach when the chip is not yet fully powered up.

Refer to section 4.15.5 of FT232HPQ datasheet for more detail. The power source is derived from bus power via PD1 port.

3.3 GPIO

The GPIOs from FT232HPQ are used to control the load switch as well as setting the PD power profile used during PD negotiation between the charger and the charging device.

3.4 Connectors

Connectors CN3, CN4 and for functional interface are detailed in Table 1 and Table 2.

Connector Pin	Name	Description
CN3-1	ADBUS0	FT232HPQ ADBUS0 pin
CN3-2	ADBUS1	FT232HPQ ADBUS1 pin
CN3-3	ADBUS2	FT232HPQ ADBUS2 pin
CN3-4	ADBUS3	FT232HPQ ADBUS3 pin
CN3-5	ADBUS4	FT232HPQ ADBUS4 pin
CN3-6	ADBUS5	FT232HPQ ADBUS5 pin
CN3-7	ADBUS6	FT232HPQ ADBUS6 pin
CN3-8	ADBUS7	FT232HPQ ADBUS7 pin
CN3-9	GPIO0	FT232HPQ GPIO0 pin
CN3-10	GPIO1	FT232HPQ GPIO1 pin
CN3-11	GPIO2	FT232HPQ GPIO2 pin
CN3-12	GPIO3	FT232HPQ GPIO3 pin
CN3-13	CN3-13	To provide 3.46V to this pin, short the solder jumper JP1
CN3-14	NC	NC
CN3-15	GND	Ground

Table 1 - Connector Pin Details of CN3

Connector Pin	Name	Description
CN4-1	ACBUS0	FT232HPQ ACBUS0 pin
CN4-2	ACBUS1	FT232HPQ ACBUS1
CN4-3	ACBUS2	FT232HPQ ACBUS2
CN4-4	ACBUS3	FT232HPQ ACBUS3
CN4-5	ACBUS4	FT232HPQ ACBUS4
CN4-6	ACBUS5	FT232HPQ ACBUS5
CN4-7	ACBUS6	FT232HPQ ACBUS6
CN4-8	ACBUS7	FT232HPQ ACBUS7
CN4-9	ACBUS8	FT232HPQ ACBUS8
CN4-10	ACBUS9	FT232HPQ ACBUS9
CN4-11	RESET#	FT232HPQ RESET# pin
CN4-12	PD_OUT	Output from PD1 Q1 load switch
CN4-13	PD_OUT	Output from PD1 Q1 load switch
CN4-14	GND	Ground
CN4-15	GND	Ground

Table 2 - Connector Pin Details of CN4

Copyright © Future Technology Devices International Limited

3.5 Schematics

Figure 4 to Figure 8 show the various elements of the schematics.

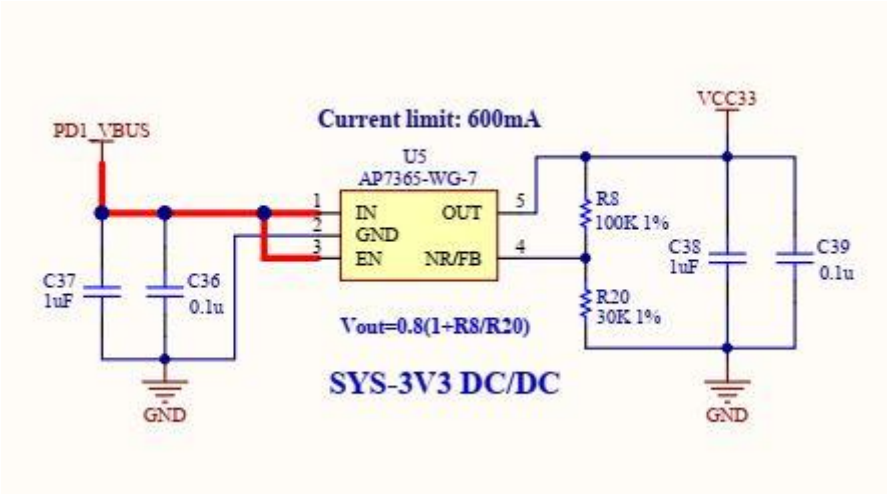

Figure 4 – DC to DC Converter for 3.46V

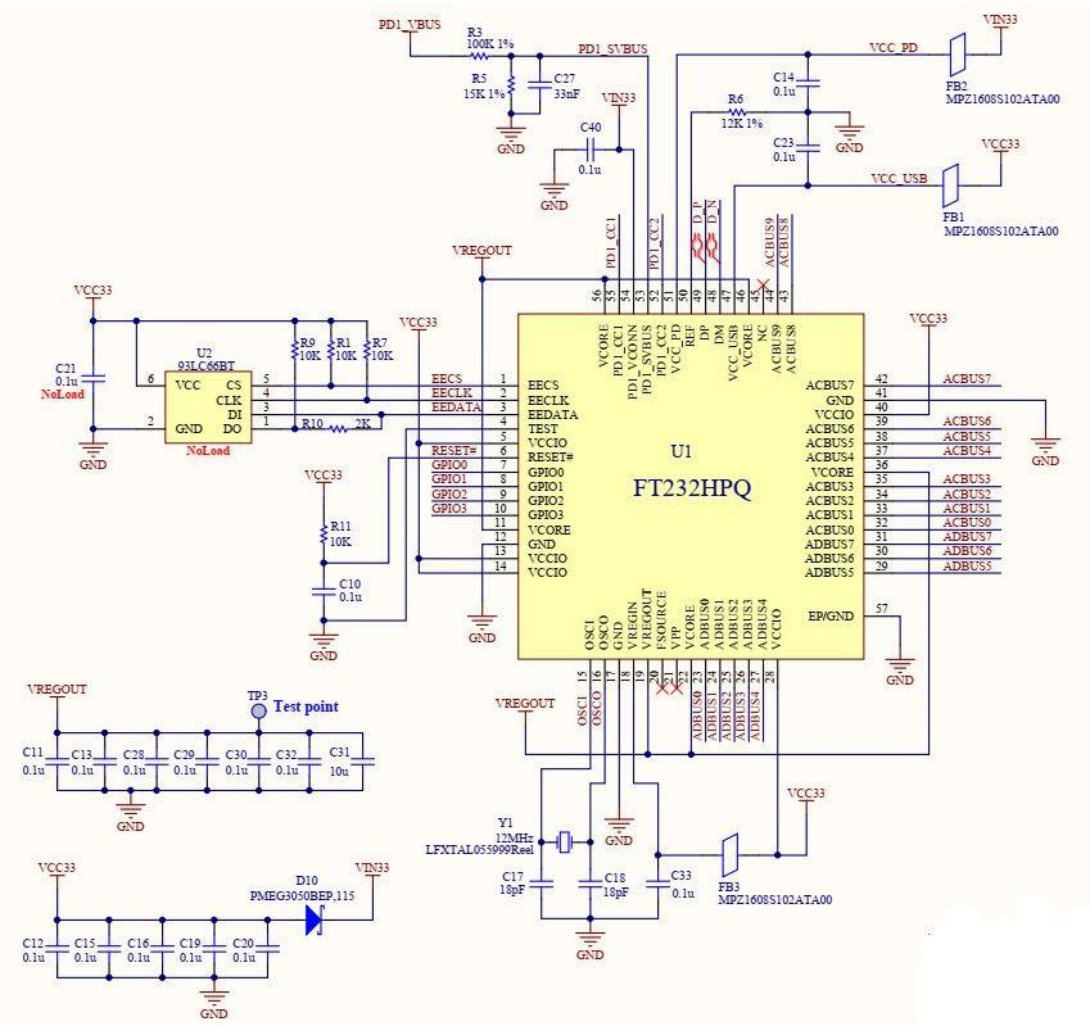

Figure 5 – FT232HPQ

Copyright © Future Technology Devices International Limited

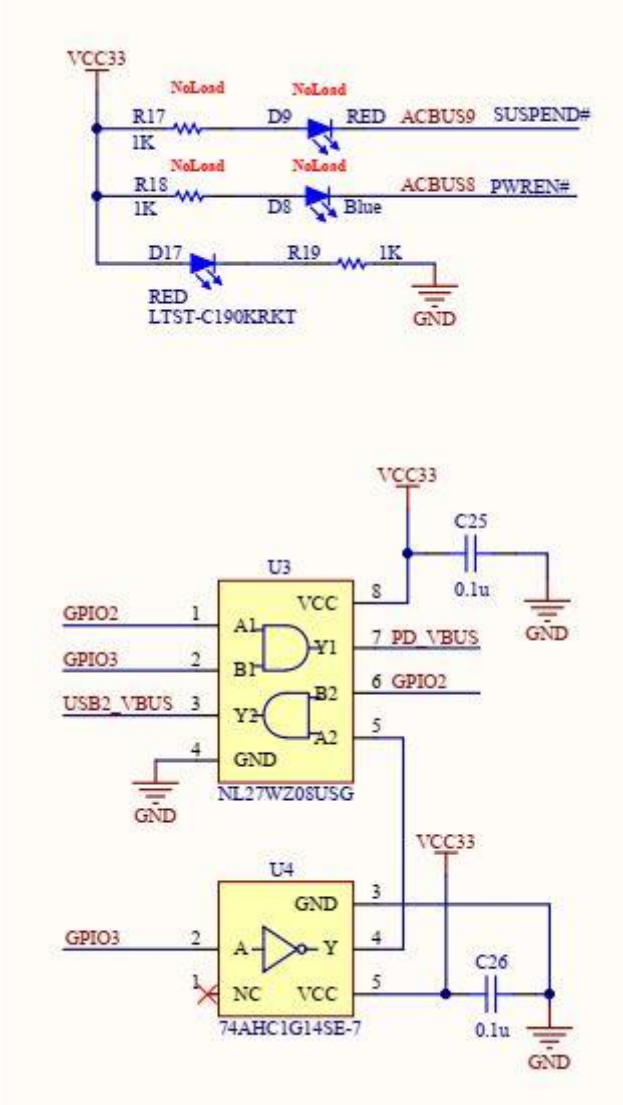

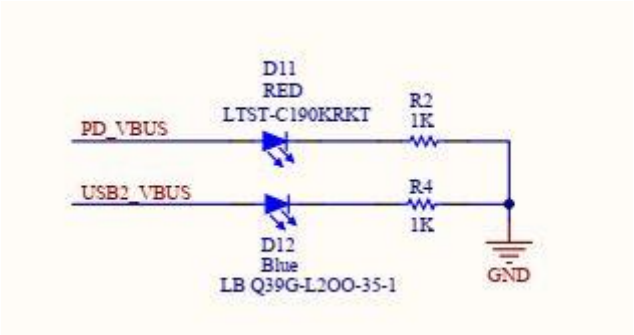

Figure 6 – PD Profile Decoding logic and LED driver Circuit for power, GPIO and USB activity

Copyright © Future Technology Devices International Limited

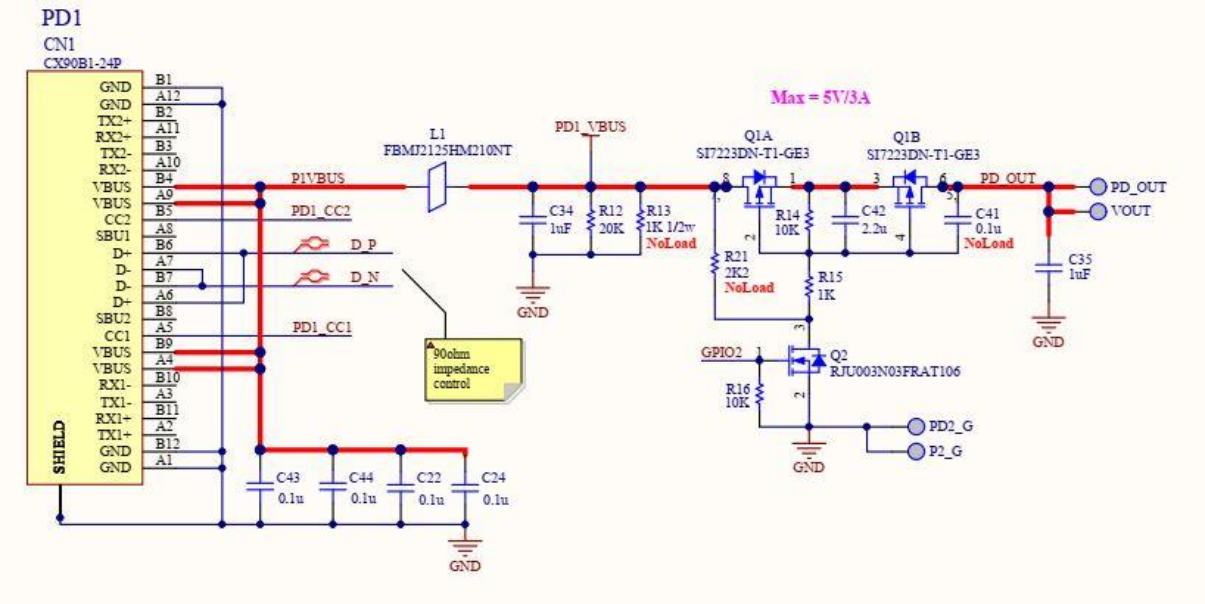

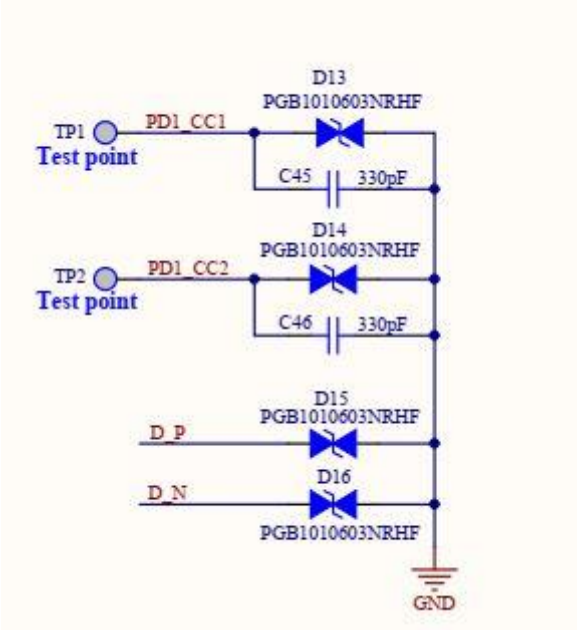

Figure 7 – PD1 Port and Load Switch

Copyright © Future Technology Devices International Limited

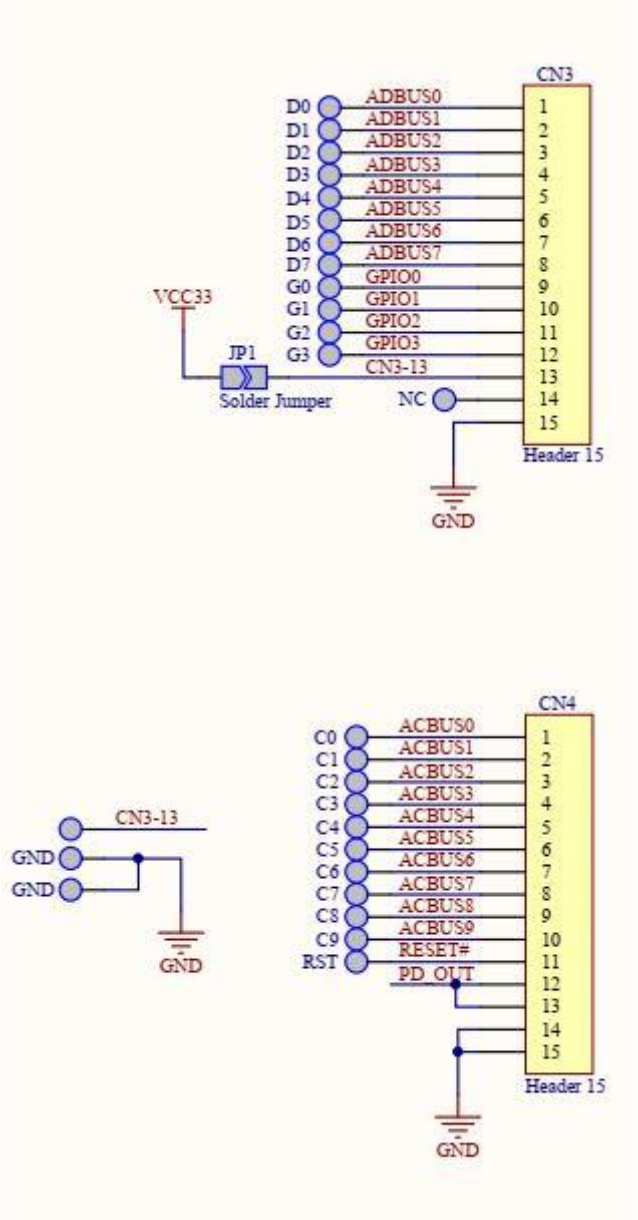

Figure 8 – Interface and Connectors

Copyright © Future Technology Devices International Limited

4 Power Delivery Functional Configuration

4.1 Sink

Sink is feature where PD can be configured as sink mode when attached to a PD charger or other PD devices to provide power to the modules connected to the board. Figure 9 and Figure 10 shows two user scenarios in UMFT232HPEV-S.

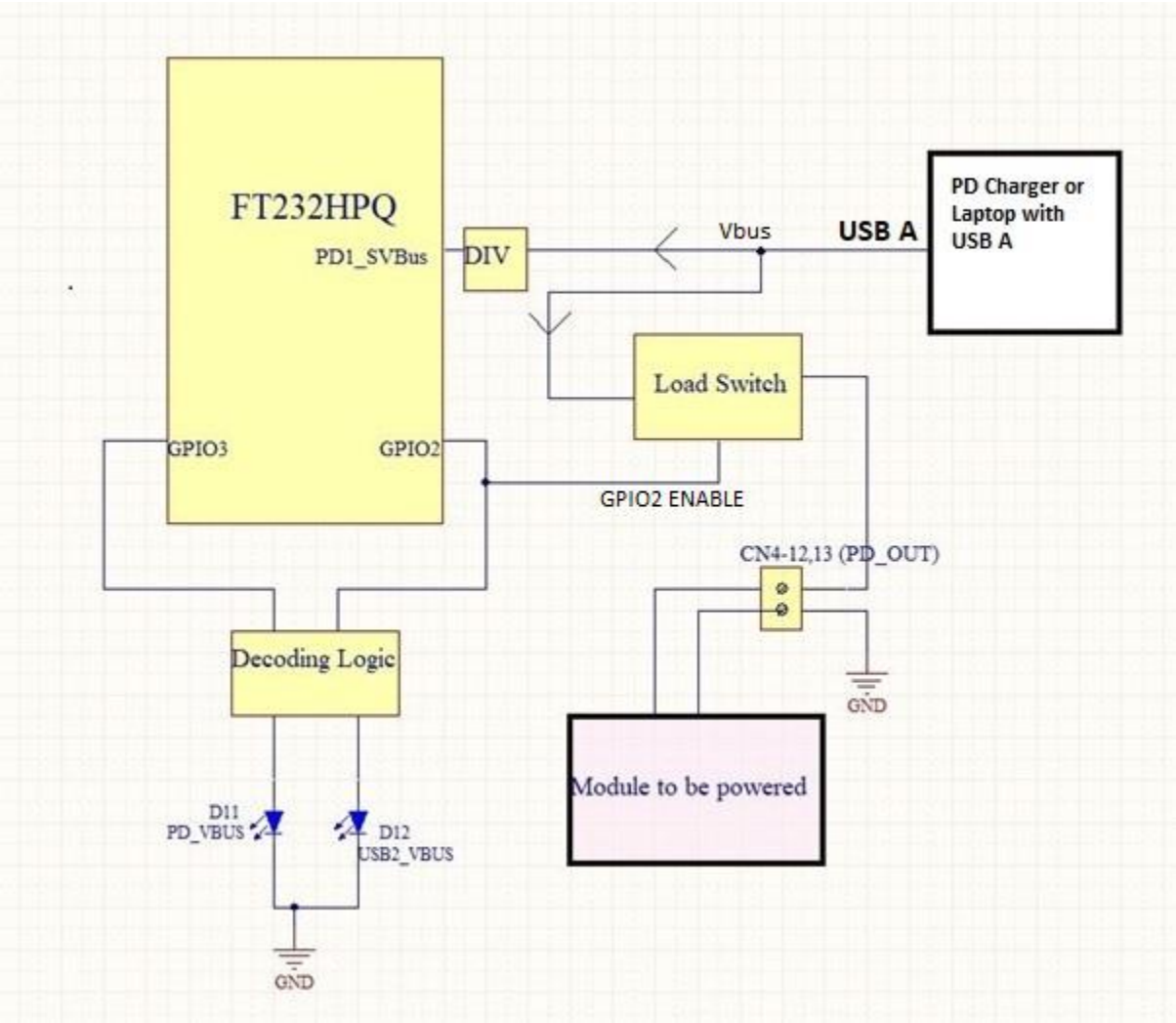

Figure 9 – Sink Block Diagram ("Module PD1 Port" sink power from "Charger USB-A")

Copyright © Future Technology Devices International Limited

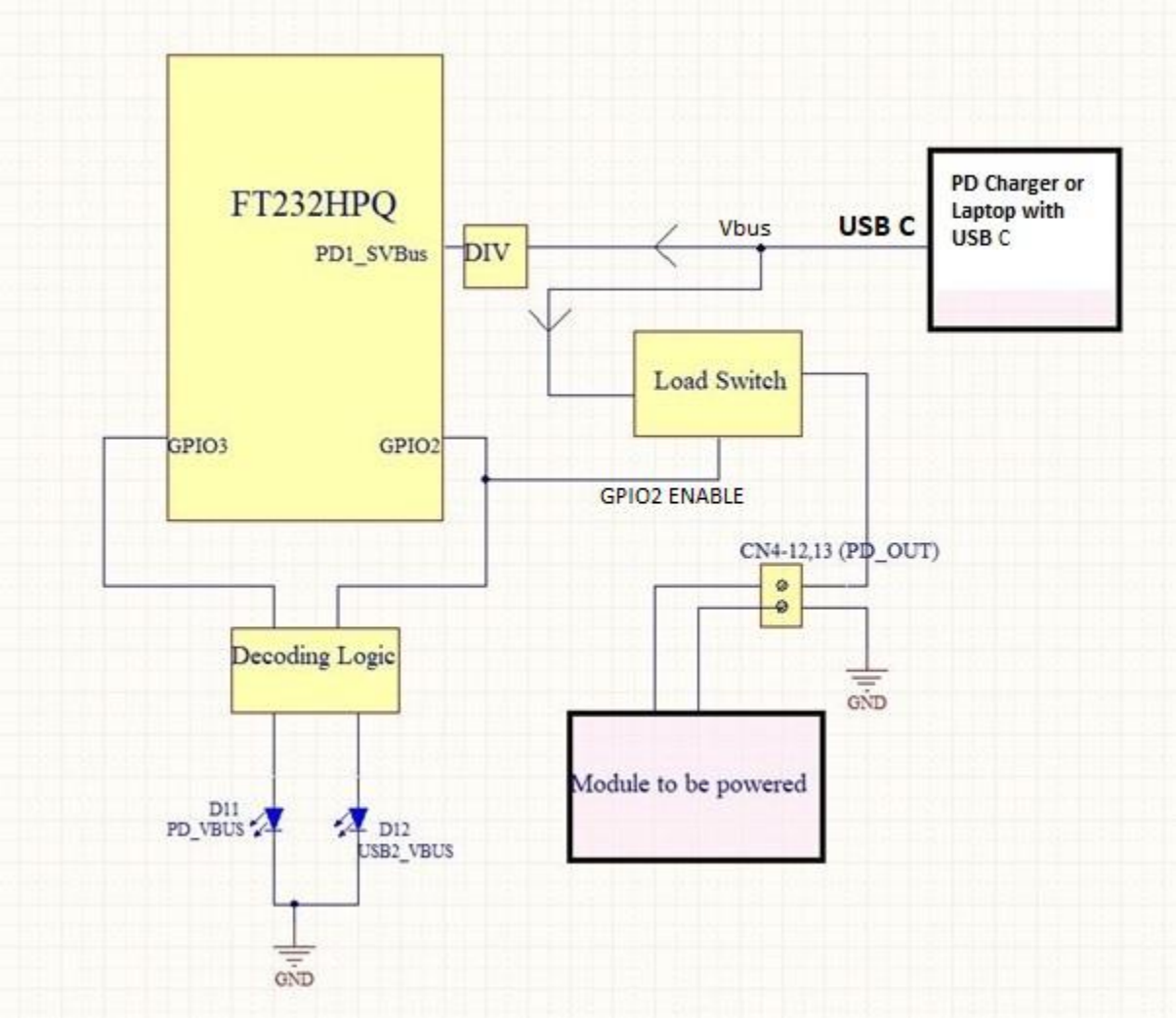

Figure 10 – Sink Block Diagram ("Module PD1 Port" sink power from "Charger USB-C")

Sink Configuration

Figure 9 shows the first scenario where "Laptop/Charger USB A" connects to "Module USB C". In this case, the decoding logic will drive USB2_VBus LED on based on the state of the GPIO2 and GPIO3 signifying that Vbus is at default 500mA. Also load switch is turned on by the assertion of GPIO2 to route the 5V to the CN4 pin12, 13 where it can be used to power the external module.

Figure 10 shows the 2nd scenario where "Laptop/Charger USB C" connects to "Module USB C". In this case, the decoding logic will drive PD_VBus LED on based on the state of GPIO2 and GPIO3 signifying Vbus is at 5V, 3A. Also load switch is turned on by the assertion of GPIO2 to route the 5V to the CN4 pin12, 13 where it can be used to power the external module

Table 3 shows the state of the GPIOs and LEDs based on the above two scenario.

GPIO2	GPIO3	D11 LED (PD_VBUS)	D12 LED (USB2_VBUS)	PD Port Configuration
High	Low	Off	On	To non PD PC Host
High	High	On	Off	To PD PC host or PD charger

Table 3 - State of the GPIOs and LEDs

Copyright © Future Technology Devices International Limited

5 Mechanical Details

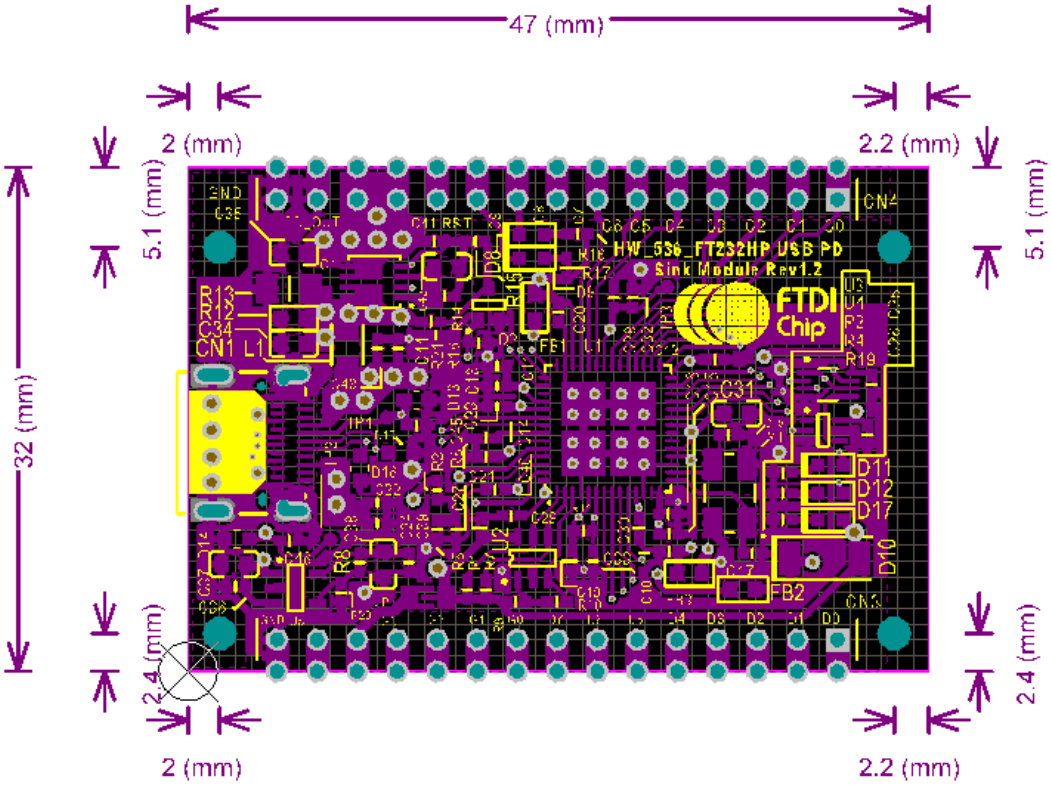

Figure 11 – UMFT232HPEV-S Sink Module – Mechanical Diagram – Top View

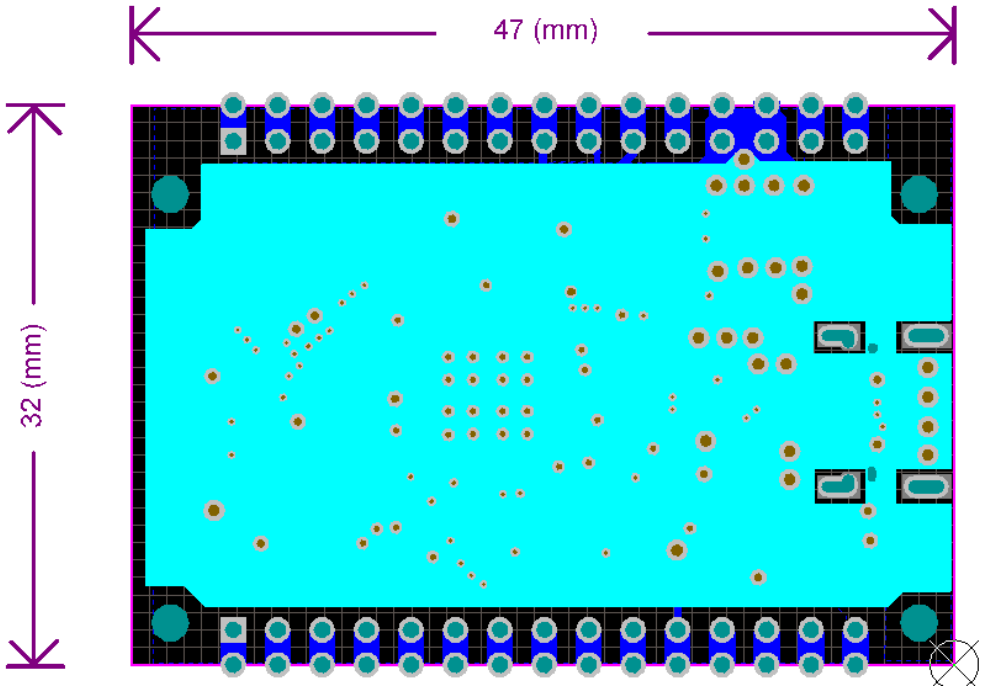

Figure 12 – UMFT232HPEV-S Sink Module – Mechanical Diagram – Bottom View

Copyright © Future Technology Devices International Limited

6 Contact Information

Head Office – Glasgow, UK

Future Technology Devices International Limited
Unit 1, 2 Seaward Place, Centurion Business Park
Glasgow G41 1HH
United Kingdom
Tel: +44 (0) 141 429 2777
Fax: +44 (0) 141 429 2758

E-mail (Sales) sales1@ftdichip.com
E-mail (Support) support1@ftdichip.com
E-mail (General Enquiries) admin1@ftdichip.com

Branch Office – Tigard, Oregon, USA

Future Technology Devices International Limited (USA)
7130 SW Fir Loop
Tigard, OR 97223-8160
USA
Tel: +1 (503) 547 0988
Fax: +1 (503) 547 0987

E-mail (Sales) us.sales@ftdichip.com
E-mail (Support) us.support@ftdichip.com
E-mail (General Enquiries) us.admin@ftdichip.com

Branch Office – Taipei, Taiwan

Future Technology Devices International Limited (Taiwan)
2F, No. 516, Sec. 1, NeiHu Road
Taipei 114
Taiwan, R.O.C.
Tel: +886 (0) 2 8797 1330
Fax: +886 (0) 2 8751 9737

E-mail (Sales) tw.sales1@ftdichip.com
E-mail (Support) tw.support1@ftdichip.com
E-mail (General Enquiries) tw.admin1@ftdichip.com

Branch Office – Shanghai, China

Future Technology Devices International Limited (China)
Room 1103, No. 666 West Huaihai Road,
Shanghai, 200052
China
Tel: +86 21 62351596
Fax: +86 21 62351595

E-mail (Sales) cn.sales@ftdichip.com
E-mail (Support) cn.support@ftdichip.com
E-mail (General Enquiries) cn.admin@ftdichip.com

Web Site

http://ftdichip.com

Distributor and Sales Representatives

Please visit the Sales Network page of the FTDI Web site for the contact details of our distributor(s) and sales representative(s) in your country.

System and equipment manufacturers and designers are responsible to ensure that their systems, and any Future Technology Devices International Ltd (FTDI) devices incorporated in their systems, meet all applicable safety, regulatory and system-level performance requirements. All application-related information in this document (including application descriptions, suggested FTDI devices and other materials) is provided for reference only. While FTDI has taken care to assure it is accurate, this information is subject to customer confirmation, and FTDI disclaims all liability for system designs and for any applications assistance provided by FTDI. Use of FTDI devices in life support and/or safety applications is entirely at the user's risk, and the user agrees to defend, indemnify and hold harmless FTDI from any and all damages, claims, suits or expense resulting from such use. This document is subject to change without notice. No freedom to use patents or other intellectual property rights is implied by the publication of this document. Neither the whole nor any part of the information contained in, or the product described in this document, may be adapted or reproduced in any material or electronic form without the prior written consent of the copyright holder. Future Technology Devices International Ltd, Unit 1, 2 Seaward Place, Centurion Business Park, Glasgow G41 1HH, United Kingdom. Scotland Registered Company Number: SC136640

Copyright © Future Technology Devices International Limited

Appendix A – References

Document References

AN_448 FT4233HP_FT2233HP_FT233HP_Configuration_Guide

AN_449 FT4233HP_FT2233HP_FT233HP_FT4232HP_FT2232HP_FT232HP_DCDC_Power Delivery Application Note

FT233HP Datasheet

Acronyms and Abbreviations

Terms	Description
EEPROM	Electrically Erasable Programmable Read-Only Memory
GPIO	General Purpose Input Output
PD	Power Delivery
USB	Universal Serial Bus
USB-IF	USB Implementer Forum

Copyright © Future Technology Devices International Limited

Appendix B – List of Tables and Figures

List of Tables

Table 1 - Connector Pin Details of CN3 6
Table 2 - Connector Pin Details of CN4 6
Table 3 - State of the GPIOs and LEDs 12

List of Figures

Figure 1 - UMFT232HPEV-S Sink Module 3
Figure 2 - UMFT232HPEV-S Sink Module – Top Board View 5
Figure 3 - UMFT232HPEV-S Sink Module – Bottom Board View 5
Figure 4 – DC to DC Converter for 3.46V 7
Figure 5 – FT232HPQ 7
Figure 6 – PD Profile Decoding logic and LED driver Circuit for power, GPIO and USB activity 8
Figure 7 – PD1 Port and Load Switch 9
Figure 8 – Interface and Connectors 10
Figure 9 – Sink Block Diagram ("Module PD1 Port" sink power from "Charger USB-A") 11
Figure 10 – Sink Block Diagram ("Module PD1 Port" sink power from "Charger USB-C") 12
Figure 11 – UMFT232HPEV-S Sink Module – Mechanical Diagram – Top View 13
Figure 12 – UMFT232HPEV-S Sink Module – Mechanical Diagram – Bottom View 13

Copyright © Future Technology Devices International Limited

Appendix C – Revision History

Document Title: UMFT232HPEV-S Sink Module Datasheet

Document Reference No.: FT_001516

Clearance No.: FTDI#565

Product Page: https://ftdichip.com/product-category/products/

Document Feedback: Send Feedback

Revision	Changes	Date
1.0	Initial Release	01-12-2021

Copyright © Future Technology Devices International Limited