REVISIONS					
REV	ECO	DESCRIPTION	DATE	BY	APPR
A1	--	RELEASED DRAWING	Jun-15-18	White	Tommy
A2	--	UPDATE NOTES	Oct-18-2018	Blink	Tommy

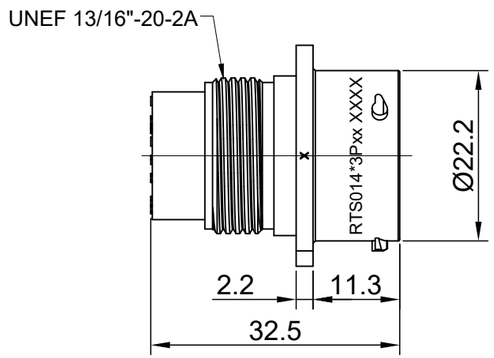

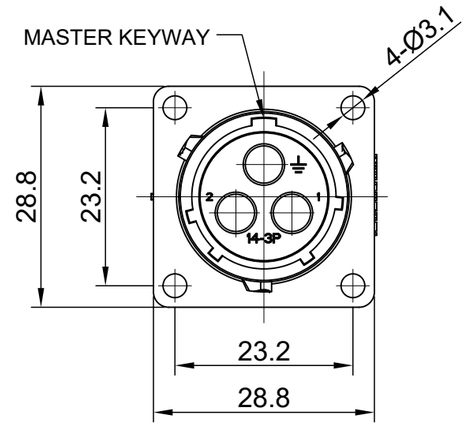

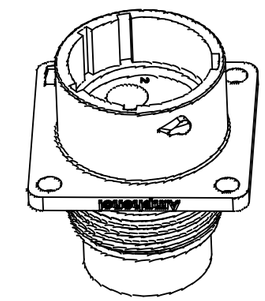

NOTES: (UNLESS OTHERWISE SPECIFIED)

1. MATERIAL:
   - SHELL: THERMOPLASTIC, UL94 V-0.
   - INSERT: THERMOPLASTIC, UL94 V-0.
   - SEAL GASKET: NBR/SILICONE RUBBER.
2. SPECIFICATIONS:
   - 2.1 RATED CURRENT: 45A (MAX).
   - 2.2 RATED VOLTAGE: 600V(AC/DC).
   - 2.3 OPERATING TEMPERATURE: SEE TABLE.
   - 2.4 DIELECTRIC WITHSTANDING VOLTAGE: LESS THAN 2 MILLIAMPS CURRENT LEAKAGE@2500 VOLTS AC.
   - 2.5 INSULATION RESISTANCE: 5000 MEGOHMS MIN.
   - 2.6 IP CLASS: IP67 AND IP69K IN THE MATED CONDITION, WIRE SEALS FULLY POPULATED.
   - 2.7 MATING CYCLES DURABILITY: 500 CYCLES MIN.
   - 2.8 RoHS COMPLIANT.
3. SUITABLE CONTACTS : 8# CONTACT.

A2

CONTACT SIZE	CONTACT PN	WIRE RANGE	CORD GRIP
8#	MP10A23x-25	16 - 14AWG	BACK SHELL
	MP10A23x-63	12 - 10AWG	
	MP10A23x-10	8 AWG	
	MP10A23xL	12 - 10AWG	END CAP

IN THE CONTACT PN,"x" DENOTE DIFFERENT PLATING.

4. ALL DIMENSIONS ARE FOR REFERENCE USE ONLY.

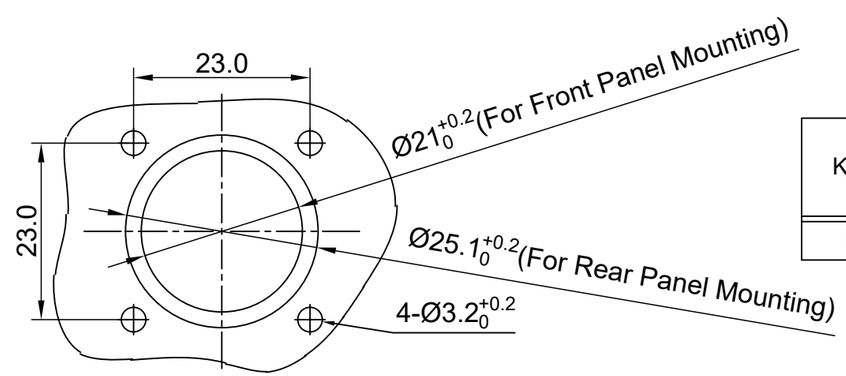

PANEL CUT OUT REFERENCE

KEY	PART NUMBER	
	-40°C ~ 105°C	-40°C ~ 125°C
N	RTS014N3P	RTS014N3P03

QUANTITY	PART NUMBER	DESCRIPTION	ITEM

MATERIALS LIST

UNLESS OTHERWISE SPECIFIED
1) All dimensions are in metric(mm).
2) Tolerances are as follows:
1 PL DEC ±0.30 | Fractions ±1/64
2 PL DEC ±0.15 | Angles ±1°
3 PL DEC ±0.08
3) Note reference = X

MATERIAL SPECIFICATIONS:

PROCESS SPECIFICATIONS:

NEXT ASS'Y:

SIGNATURES		DATE
DRAWN:	Blink	Oct-18-2018
CHECKED:	Tod	Oct-18-2018
ENGINEER:		
APPROVAL:	Tommy	Oct-18-2018
CUSTOMER:		

THIS DRAWING IS SUPPLIED FOR INFORMATION ONLY. DESIGN FEATURES, SPECIFICATIONS AND PERFORMANCE DATA SHOWN HEREON ARE THE PROPERTY OF THE AMPHENOL CORPORATION. NO RIGHTS OF REPRODUCTION ARE IMPLIED. ALL DIMENSIONS ARE SUBJECT TO NORMAL MANUFACTURING VARIATIONS.

Amphenol
Sine Systems - www.amphenol-sine.com
44724 Morley Drive
Clinton Township, MI 48036

ECO-MATE, RECEPTACLE, FLANGE, SIZE 14, 3 POS, PIN

SIZE	TYPE	DWG NO:	REVISION
B	C-	RTS014*3Pxx	A2

SCALE: NONE SHEET 1 OF 1

TITLE: ECO-MATE, RECEPTACLE, FLANGE, SIZE 14, 3 POS, PIN
DWG NO: RTS014*3Pxx
REV: A2
SH: 1
OF: 1

ecomate® RM/RSSM/Aquarius™ - Contact Size 3.6mm (1403 Insert Arrangement) Options

Crimp Contacts, 1403 Insert Arrangement, Machined					
Part Number		AWG	Wire Range (mm²)	For Use w Endcap	Plating
Male	Female				
MP10A23T-10	MS10A23T-10	8	10.0	No	Tin
MP10A23S-10	MS10A23S-10	8	10.0	No	Silver
MP10A23F-10	MS10A23F-10	8	10.0	No	Gold Flash
MP10A23G5-10	MS10A23G5-10	8	10.0	No	Gold 5µ"
MP10A23G10-10	MS10A23G10-10	8	10.0	No	Gold 10µ"
MP10A23G15-10	MS10A23G15-10	8	10.0	No	Gold 15µ"
MP10A23G30-10	MS10A23G30-10	8	10.0	No	Gold 30µ"
MP10A23S-63	MS10A23S-63	12-10	4.0 - 6.0	No	Silver
MP10A23F-63	MS10A23F-63	12-10	4.0 - 6.0	No	Gold Flash
MP10A23TL	MS10A23T	12-10	3.0 - 6.0	Yes	Tin
MP10A23SL	MS10A23S	12-10	3.0 - 6.0	Yes	Silver
MP10A23FL	MS10A23F	12-10	3.0 - 6.0	Yes	Gold Flash
MP10A23G5L	MS10A23G5	12-10	3.0 - 6.0	Yes	Gold 5µ"
MP10A23G10L	MS10A23G10	12-10	3.0 - 6.0	Yes	Gold 10µ"
MP10A23G15L	MS10A23G15	12-10	3.0 - 6.0	Yes	Gold 15µ"
MP10A23G30L	MS10A23G30	12-10	3.0 - 6.0	Yes	Gold 30µ"
MP10A23S-25	MS10A23S-25	16-14	1.5 - 2.5	No	Silver
MP10A23F-25	MS10A23F-25	16-14	1.5 - 2.5	No	Gold Flash

Tooling, Machined	
Part Number	**Description**
QXRT08	Contact Extraction Tool, # 8 (Ø 3.6mm) Contact
M300BT	Hand Crimper
WA27-300BT-EP	Pneumatic Crimper
TP968	Locator M3200BT and WA27-300BT-EP

Plating Options	
Symbol	**Plating**
T	Tin Plating Over Nickel
S	Silver Plating Over Nickel
F	Gold Plated
G5	Gold Plated (Thickeness 5µ")
G10	Gold Plated (Thickeness 10µ")
G15	Gold Plated (Thickeness 15µ")
G30	Gold Plated (Thickeness 30µ")