REVISIONS					
REV	ECO	DESCRIPTION	DATE	BY	APPR
A1	–	RELEASED DRAWING	Feb-02-2021	Ronald	Tommy

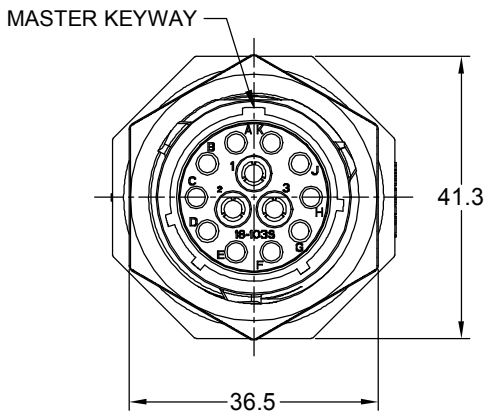

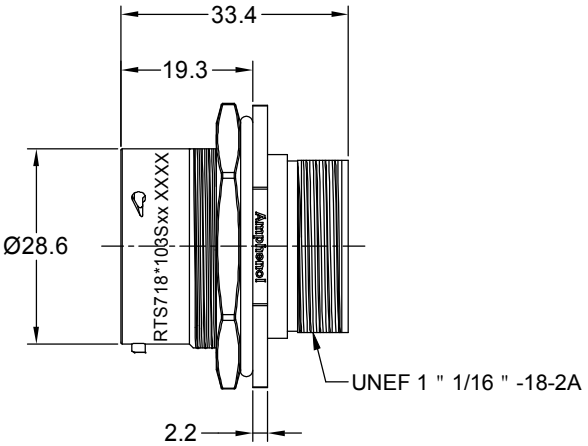

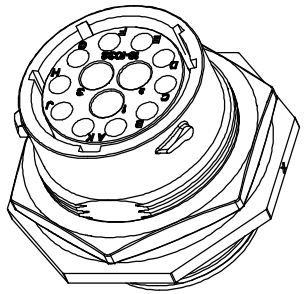

NOTES : (UNLESS OTHERWISE SPECIFIED)

1. MATERIAL :
   - SHELL : THERMOPLASTIC , UL94 V-0.
   - INSERT : THERMOPLASTIC , UL94 V-0.
   - O-RING : NBR/SILICONE RUBBER.
   - SEAL GASKET : NBR/SILICONE RUBBER.
   - JAM NUT : ALUMINIUM ALLOY , BLACK ANODIZING.
2. SPECIFICATIONS :
   - 2.1 RATED CURRENT :
     - 2.1.1 16# CONTACT 13A (MAX).
     - 2.1.2 RF CONTACT 1A (MAX) .
   - 2.2 RATED VOLTAGE : 500V(AC/DC).
   - 2.3 OPERATING TEMPERATURE : SEE TABLE.
   - 2.4 DIELECTRIC WITHSTANDING VOLTAGE : LESS THAN 2 MILLIAMPS CURRENT LEAKAGE@2000 VOLTS AC.
   - 2.5 INSULATION RESISTANCE : 5000 MEGOHMS MIN.
   - 2.6 IP--CLASS : IP67 AND IP69K IN THE MATED CONDITION, PANEL EXTERNAL.
   - 2.7 MATING CYCLES DURABILITY : 500 CYCLES MIN.
   - 2.8 RoHS COMPLIANT.
3. SUITABLE CONTACTS : 16# & RF CONTACTS.
4. ALL DIMENSIONS ARE FOR REFERENCE USE ONLY.

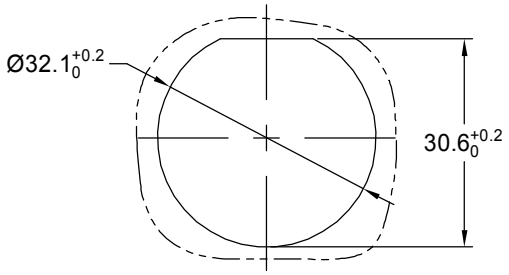

PANEL CUT OUT REFERENCE

KEY	PART NUMBER	
	-40°C ~ 105°C	-40°C ~ 125°C
N	RTS718N103S	RTS718N103S03

QUANTITY	PART NUMBER	DESCRIPTION	ITEM

MATERIALS LIST

UNLESS OTHERWISE SPECIFIED
1) All dimensions are in metric(mm).
2) Tolerances are as follows:
1 PL DEC ±0.30 | Fractions ±1/64
2 PL DEC ±0.15 | Angles ±1°
3 PL DEC ±0.08
3) Note reference = X

MATERIAL SPECIFICATIONS:

PROCESS SPECIFICATIONS:

NEXT ASSY:

SIGNATURES		DATE
DRAWN:	Ronald	Feb-02-21
CHECKED:	Rian	Feb-03-21
ENGINEER:		
APPROVAL:	Tommy	Feb-04-21
CUSTOMER:		

THIS DRAWING IS SUPPLIED FOR INFORMATION ONLY. DESIGN FEATURES, SPECIFICATIONS AND PERFORMANCE DATA SHOWN HEREON ARE THE PROPERTY OF THE AMPHENOL CORPORATION. NO RIGHTS OF REPRODUCTION ARE IMPLIED. ALL DIMENSIONS ARE SUBJECT TO NORMAL MANUFACTURING VARIATIONS.

Amphenol

Sine Systems - www.amphenol-sine.com
44724 Morley Drive
Clinton Township, MI 48036

ECOMATE AQUARIUS,RECEPTACLE, JAM NUT,SIZE 18,10+3 POS,SOCKET

SIZE	TYPE	DWG NO:	REVISION
B	C-	RTS718*103Sxx	A1

SCALE: NONE SHEET 1 OF 1

TITLE: ECOMATE AQUARIUS,RECEPTACLE,JAM NUT,SIZE 18,10+3 POS,SOCKET
DWG NO: RTS718*103Sxx
REV: A1
SH: 1
OF: 1

ecomate® RM/RSSM/Aquarius™ - Contact Size 16 Options

Crimp Contacts, Machined				
Part Number		AWG	Wire Range (mm²)	Plating
Male	Female			
MP14M23F	MS14M23F	14	2.0-2.5	Gold Flash
MP14M23G5	MS14M23G5	14	2.0-2.5	Gold 5µ"
MP14M23G10	MS14M23G10	14	2.0-2.5	Gold 10µ"
MP14M23G15	MS14M23G15	14	2.0-2.5	Gold 15µ"
MP14M23G30	MS14M23G30	14	2.0-2.5	Gold 30µ"
MP16M23F	MS16M23F	18-16	0.75-1.5	Gold Flash
MP16M23G5	MS16M23G5	18-16	0.75-1.5	Gold 5µ"
MP16M23G10	MS16M23G10	18-16	0.75-1.5	Gold 10µ"
MP16M23G15	MS16M23G15	18-16	0.75-1.5	Gold 15µ"
MP16M23G30	MS16M23G30	18-16	0.75-1.5	Gold 30µ"
MP20M23F	MS20M23F	22-20	0.34-0.50	Gold Flash
MP20M23G5	MS20M23G5	22-20	0.34-0.50	Gold 5µ"
MP20M23G10	MS20M23G10	22-20	0.34-0.50	Gold 10µ"
MP20M23G15	MS20M23G15	22-20	0.34-0.50	Gold 15µ"
MP20M23G30	MS20M23G30	22-20	0.34-0.50	Gold 30µ"
MP24M23F	MS24M23F	26-24	0.14-0.25	Gold Flash
MP24M23G5	MS24M23G5	26-24	0.14-0.25	Gold 5µ"
MP24M23G10	MS24M23G10	26-24	0.14-0.25	Gold 10µ"
MP24M23G15	MS24M23G15	26-24	0.14-0.25	Gold 15µ"
MP24M23G30	MS24M23G30	26-24	0.14-.025	Gold 30µ"

Crimp Contacts, Stamped & Formed				
Part Number		AWG	Wire Range (mm²)	Plating
Male	Female			
SP14M2F	SS14M2F	14	2.0-2.5	Gold Flash
SP14M2G5	SS14M2G5	14	2.0-2.5	Gold 5µ"
SP14M2G10	SS14M2G10	14	2.0-2.5	Gold 10µ"
SP14M2G15	SS14M2G15	14	2.0-2.5	Gold 15µ"
SP14M2G30	SS14M2G30	14	2.0-2.5	Gold 30µ"
SP16M2F	SS16M2F	18-16	0.75-1.5	Gold Flash
SP16M2G5	SS16M2G5	18-16	0.75-1.5	Gold 5µ"
SP16M2G10	SS16M2G10	18-16	0.75-1.5	Gold 10µ"
SP16M2G15	SS16M2G15	18-16	0.75-1.5	Gold 15µ"
SP16M2G30	SS16M2G30	18-16	0.75-1.5	Gold 30µ"
SP20M2F	SS20M2F	22-20	0.34-0.50	Gold Flash
SP20M2G5	SS20M2G5	22-20	0.34-0.50	Gold 5µ"
SP20M2G10	SS20M2G10	22-20	0.34-0.50	Gold 10µ"
SP20M2G15	SS20M2G15	22-20	0.34-0.50	Gold 15µ"
SP20M2G30	SS20M2G30	22-20	0.34-0.50	Gold 30µ"
SP24M2F	SS24M2F	26-24	0.14-0.25	Gold Flash
SP24M2G5	SS24M2G5	26-24	0.14-0.25	Gold 5µ"
SP24M2G10	SS24M2G10	26-24	0.14-0.25	Gold 10µ"
SP24M2G15	SS24M2G15	26-24	0.14-0.25	Gold 15µ"
SP24M2G30	SS24M2G30	26-24	0.14-0.25	Gold 30µ"

Tooling, Machined	
Part Number	Description
QXRT16	Contact Extraction Tool, #16 (Ø 1.6) Contact
MFX-3959	Hand Crimp Tool for Machined Contacts
MFX-3960	Pneumatic Crimp Tool for Machined Contact

Tooling, Stamped & Formed	
Part Number	Description
QXRT16	Contact Extraction Tool, #16 (Ø 1.6) Contact
MFX-3954	Hand Tool, Stamped & Formed Contact, Size 16, 20-14AWG
MFX-3957	Crimp Die, Stamped & Formed Contact

Plating Options, All	
Symbol	Plating
T	Tin Plated (for Stamped & Formed Contacts)
S	Silver Plated 5Um (for Machined Contacts)
F	Gold Plated
G5	Gold Plated (Thickness 5µ")
G10	Gold Plated (Thickness 10µ")
G15	Gold Plated (Thickness 15µ")
G30	Gold Plated (Thickness 30µ")

Misc Tooling, All	
Part Number	Description
CA-4020-59	Sealing Plug, Size 16 & 20

Standard Quantity Order Options	
Machined	Stamped & Formed
Bulk Package, 500 Pieces	Reel, 3000 Pieces

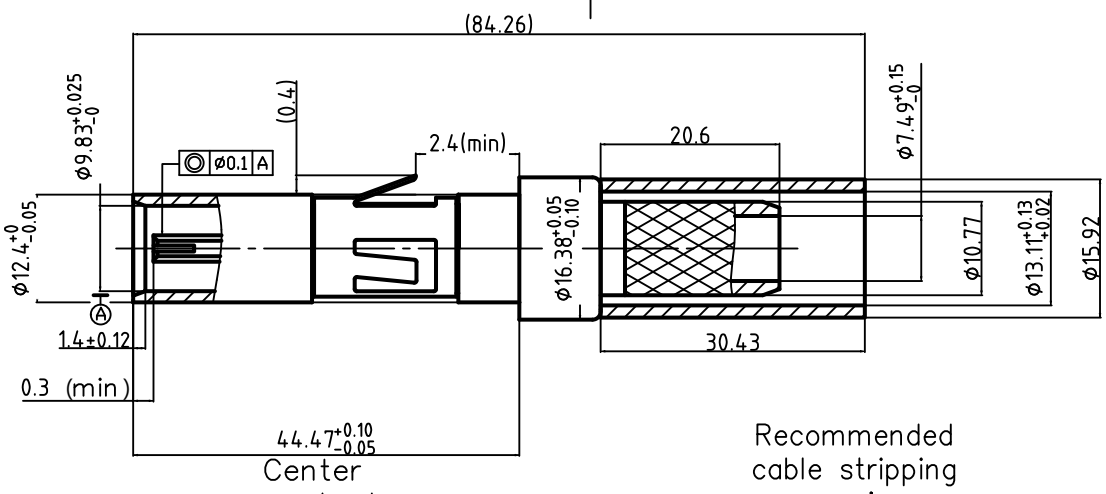

Center contact

Recommended cable stripping dim's

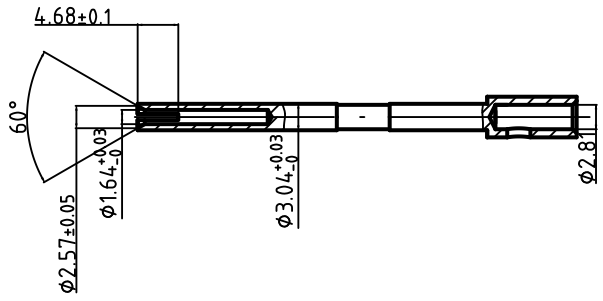

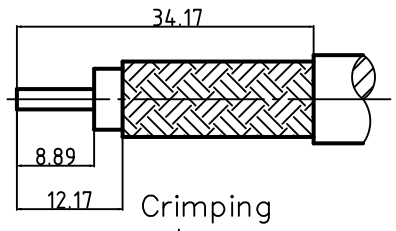

Crimping hex. for the ferrule

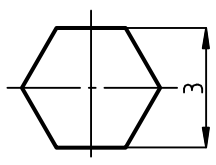

BUILD INSTRUCTIONS:
SLIDE AMPHENOL SINE SYSTEMS ALINMENT COLLAR 20-80646 ON COAX CABLE (PURCHASED SEPARATELY).

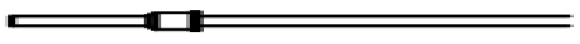

PREP CABLE AS SHOWN ABOVE. SOLDER CENTER CONTACT ONTO THE CENTER CONDUCTOR.



SLIDE THE CRIMP FERRULE OVER THE COAX CABLE AND PUSH THE CENTER PIN INTO COAX CONTACT.



CRIMP FERRULE USING DANIELS CRIMPER HX4 AND DIE SET Y193.



Electrical Characteristics:

Characteristic impedance:	50Ω
Working voltage:	500V(rms)
Frequency range:	0-10GHz
Dielectric withstanding voltage:	750V(volts RMS)
Contact resistance:	Center contact: ≤10mΩ, Outer contact:≤3mΩ
Insulation resistance:	≥1000MΩ
VSWR:	≤1.30(0-3GHz)

Note:
1.Match cable: RG-316/U
2.Center contact :Solder
3.Outer contact: Crimp

NO.	Title/Name	Material	Finish	QTY	Remark
4	Ferrule	Copper alloy	Nickel	1	
3	Body	Brass	Gold	1	
2	Insulator	PTFE	---	1	
1	Center contact	Beryllium copper	Gold	1	

Customer Code. AFN	Customer part NO.		
Unless otherwise specified tolerance		Designed J-0030	Date 2011.01.28
X.XX±0.1	X±0.3		
X.X±0.2	Ang.±1°	Checked J-0006	Date 2011.01.28

Notice:
This document is the property of Amphenol ,reproduction or disclosure is forbidden unless authorized by Amphenol.

AMPHENOL

Part No MIM-K2.5Y

Drawing No MIM.1212006/R/1

Rev. V6.0

Scale 5:1 Sheet 1/1

REV	ZONE	ECO	DESCRIPTION	DATE	BY	APPR
01	–	–	RELEASE NUMBER	Jul-16-20	Ronald	Tommy
02	--	--	CHANGE ∅4.5 to ∅4.55	Sep-14-20	Ronald	Tommy

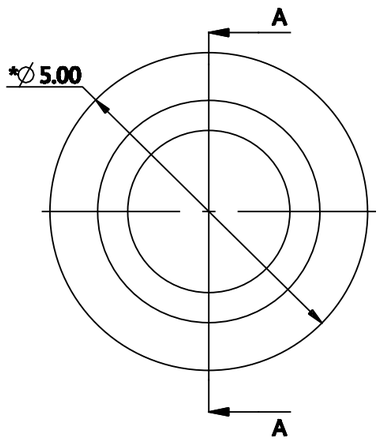

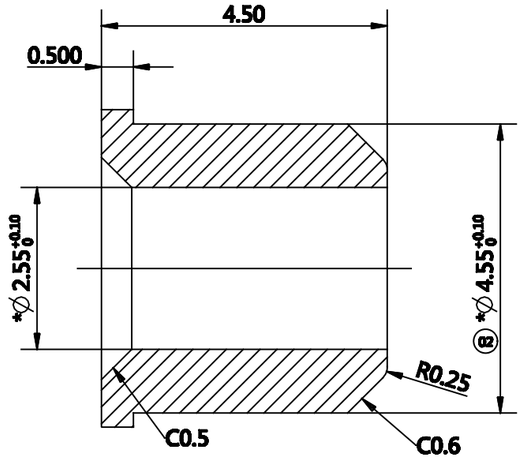

SECTION A-A

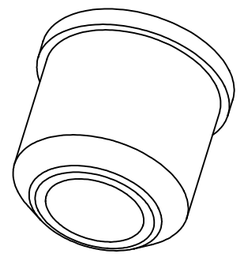

NOTES:
1. PARTS TO BE FREE OF NICKS, BURRS, FLASH, TOOL MARKS, OR OTHER DEFECTS THAT MAY AFFECT PART FUNCTION.
2. ALL UNSPECIFIED RADIUS TO BE R0.2.
3. ALL DIMENSIONS ARE AFTER SHRINKAGE.
4. "*" DENOTES KPC (KEY PRODUCT CHARACTERISTIC).
5. ALL DIMENSIONS NOT SHOWN TO BE MEASURED FROM CAD MODEL.
6. ROHS COMPLIANT.

MATERIALS LIST

UNLESS OTHERWISE SPECIFIED
1) All dimensions are in metric(mm).
2) Tolerances are as follows:
1 PL DEC ±0.20
2 PL DEC ±0.10 Fractions ±1/64
3 PL DEC ±0.05 Angles ±1°

MATERIAL SPECIFICATIONS:
PP

PROCESS SPECIFICATIONS:

SIGNATURE		DATE
DRAWN	Ronald	Jul-16-20
CHECKED		
ENGINEER		
APPROVAL		
CUSTOMER		

THIS DRAWING IS SUPPLIED FOR INFORMATION ONLY. DESIGN FEATURES,SPECIFICATIONS AND PERFORMANCE DATA SHOWN HEREON ARE THE PROPERTY OF THE AMPHENOL CORPORATION.NO RIGHTS OF REPRODUCTION ARE IMPLIED.ALL DIMENSIONS ARE SUBJECT TO NORMAL MANUFACTURING VARIATIONS.

SINE Systems Corporation
A Subsidiary of Amphenol Corporation

COLLAR

DWG NO.	20-80646				
THIRD ANGLE PROJECTION	FSCM NO.	SIZE	MASS	REV	SCALE
		A4		02	8:1

SHEET 1 OF 1 NEXT ASS'Y: