CUI DEVICES

MODEL: UJ2-MIBH-G-SMT-TR | **DESCRIPTION:** USB RECEPTACLE

FEATURES

- USB micro B type receptacle
- USB 2.0
- horizontal orientation
- surface mount

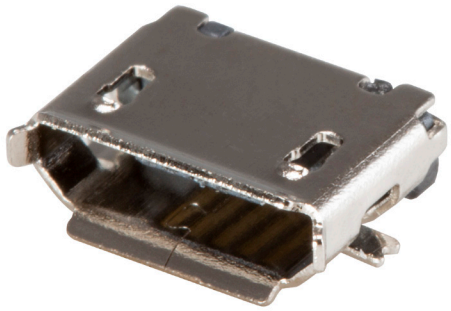

RoHS

SPECIFICATIONS

parameter	conditions/description	min	typ	max	units
USB standard	USB 2.0				
rated input voltage				5	Vdc/Vac
rated input current	power contacts (pins 1 & 5) signal contacts (pins 2, 3, 4)			1.8 0.5	A A
contact resistance[1]	between terminals and mating plug			50	mΩ
insulation resistance	at 500 Vdc between adjacent contacts or ground	1,000			MΩ
voltage withstand	for 1 minute between adjacent contacts or ground			100	Vac
insertion force	at a rate of 12.5 mm/min			35	N
withdrawal force	at a rate of 12.5 mm/min	8			N
life			3,000		cycles
operating temperature		-30		85	°C
storage temperature		-40		85	°C
flammability rating	UL94V-0				
RoHS	yes				

Note: 1. When measured at 20 mV max / 100 mA.

SOLDERABILITY

parameter	conditions/description	min	typ	max	units
reel storage	at relative humidity <95%			25	°C
reflow soldering[2]	as per IPC/JEDECJ-STD-020C (PCB thk: <1.6 mm)		255	260	°C

Note: 2. It is recommended to reflow solder within 72 hours from opening vacuum packaging at a temperature <30°C & relative humidity <60%.

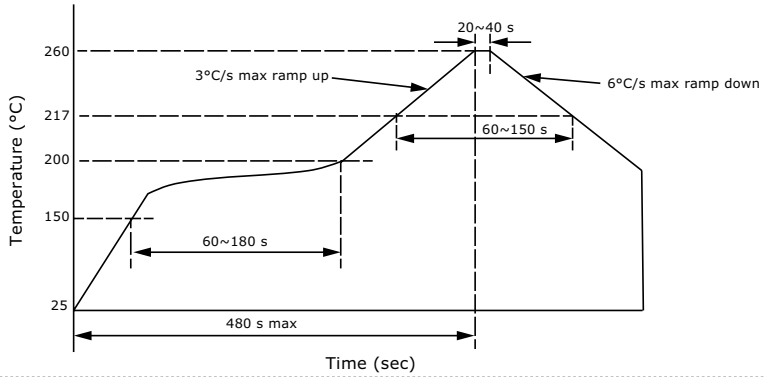

MECHANICAL DRAWING

units: mm
tolerance:
X.X ±0.30 mm
X.XX ±0.20 mm

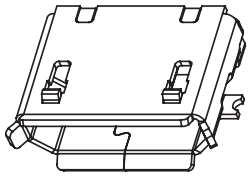

	MATERIAL	PLATING
housing	LCP (UL94V-0)	black
shell	copper alloy	nickel
contact	copper alloy	contact: gold all over: nickel

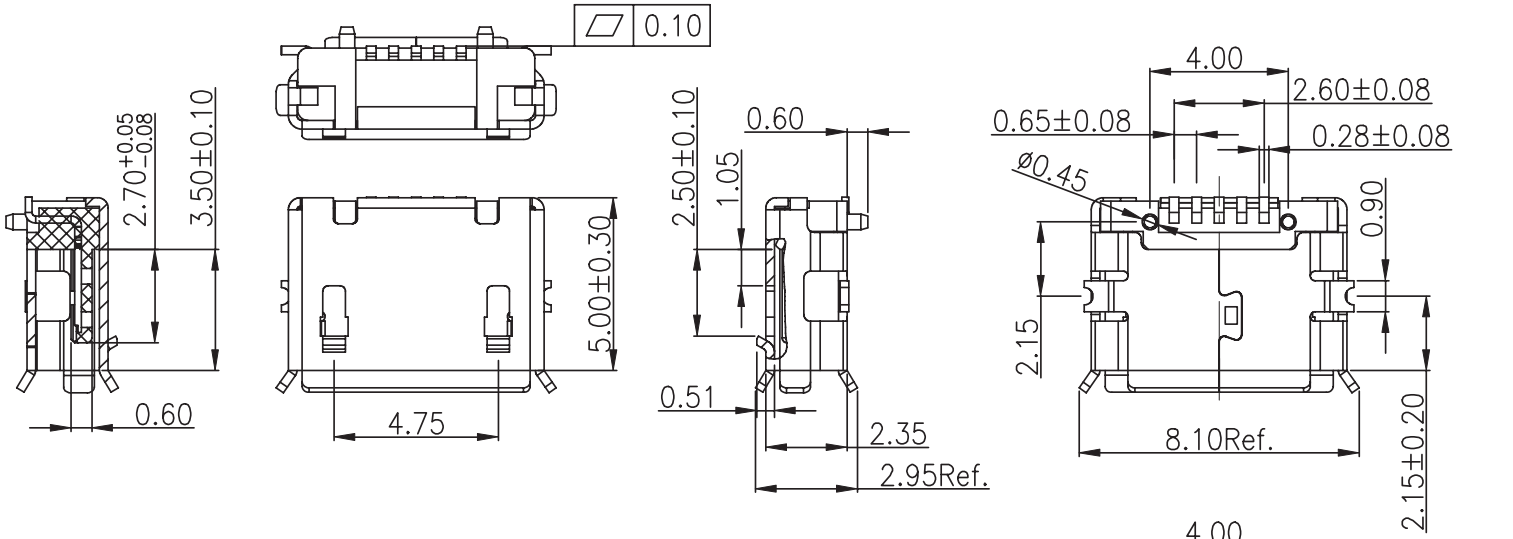

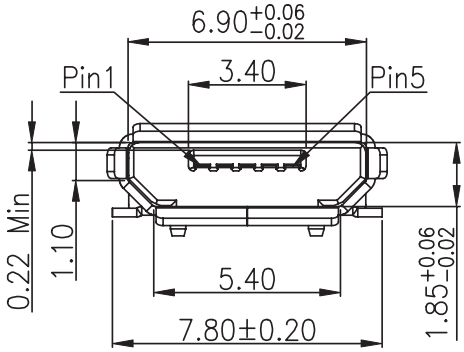

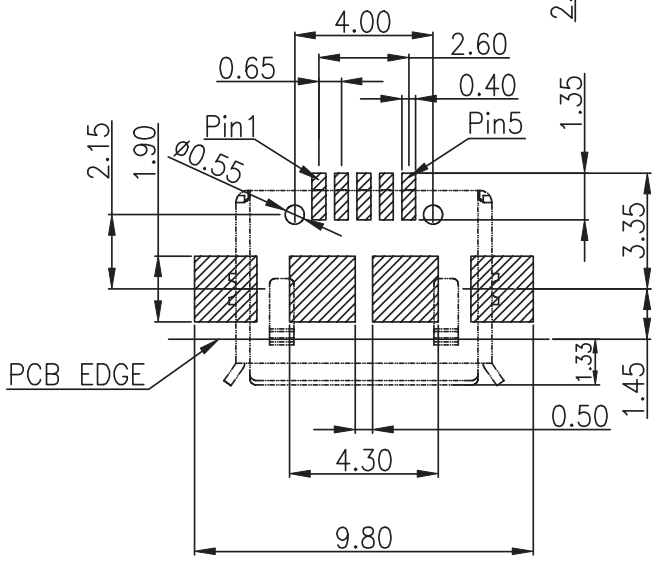

Recommended PCB Layout
Top View

PACKAGING

units: mm

Reel Size: Ø330 mm
Reel QTY: 1,000 pcs per reel

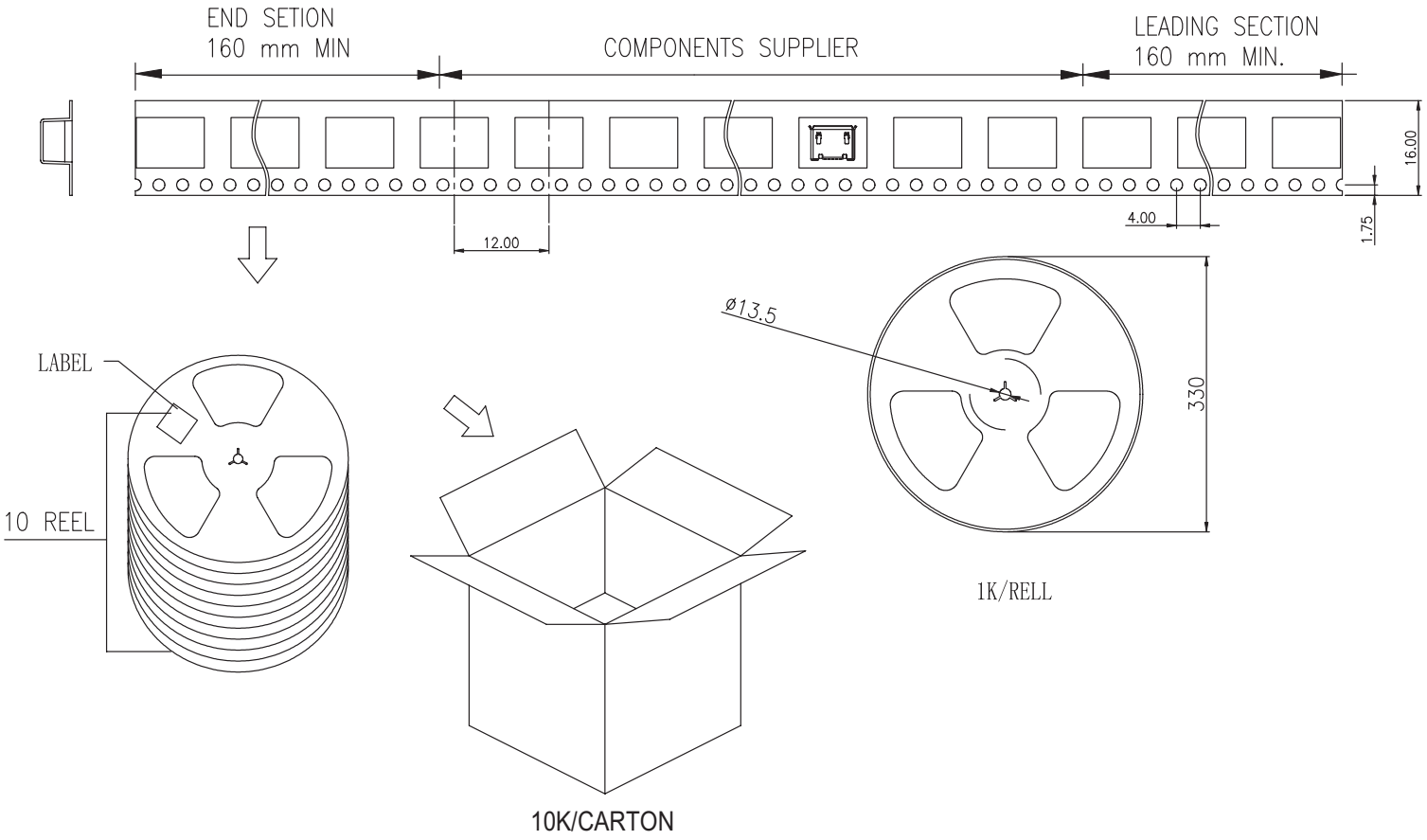

REVISION HISTORY

rev.	description	date
1.0	initial release	12/11/2020
1.01	added USB standard	04/07/2022

The revision history provided is for informational purposes only and is believed to be accurate.

CUI DEVICES

CUI Devices offers a one (1) year limited warranty. Complete warranty information is listed on our website.

CUI Devices reserves the right to make changes to the product at any time without notice. Information provided by CUI Devices is believed to be accurate and reliable. However, no responsibility is assumed by CUI Devices for its use, nor for any infringements of patents or other rights of third parties which may result from its use.

CUI Devices products are not authorized or warranted for use as critical components in equipment that requires an extremely high level of reliability. A critical component is any component of a life support device or system whose failure to perform can be reasonably expected to cause the failure of the life support device or system, or to affect its safety or effectiveness.

cuidevices.com