Hot Swap Smart Fuse

NCP81295, NCP81296

The NCP81295 and NCP81296 are 50 A, electronically re−settable, in−line fuses for use in 12 V, high current applications such as servers, storage and base stations. The NCP81295/6 offers a very low 0.65 mΩ integrated MOSFET to reduce solution size and minimize power loss. It also integrates a highly accurate current sensor for monitoring and overload protection.

Power Features

- Co−packaged Power Switch, Hotswap Controller and Current Sense
- Up to 60 A Peak Current Output, 50 A Continuous
- Vin Range: 4.5 V to 18 V
- 0.65 mΩ, no R_{SENSE} Required

Control Features

- Enable Input
- Optional Enable−controlled Output Pulldown when Disabled
- Programmable Soft−Start
- Programmable, Multi−level Current Limit

Reporting Features

- Accurate Analog Load Current Monitor
- Programmable Over Current Alert Output
- Analog Temperature Output
- Status Fault OK Output

Other Features

- 5 mm x 5 mm QFN32 Package
- Operating Temperature: −40°C to 125°C
- Can be Paralleled for Higher Current Applications
- Built−in Insertion Delay for Hotswap Applications
- NCP81295: Latch off for Following Protection Features
  NCP81296: Auto−Retry Mode for Following Protection Features
  - Current−limit after Delay
  - Fast Short−circuit Protection
  - Over−Temperature Shutdown
  - Excessive Soft−start Duration
- Internal Switch Fault Diagnostics
- Low−power Auxiliary Output Voltage

ON Semiconductor®

www.onsemi.com

MARKING DIAGRAM

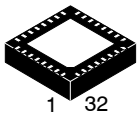

LQFN32 5x5, 0.5P
CASE 487AA

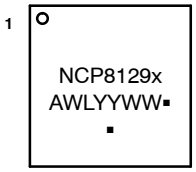

NCP8129x = Specific Device Code
x = 5 or 6
A = Assembly Location
WL = Wafer Lot
YY = Year
WW = Work Week
▪ = Pb−Free Package
(may or may not be present)

(Note: Microdot may be in either location)

PINOUT

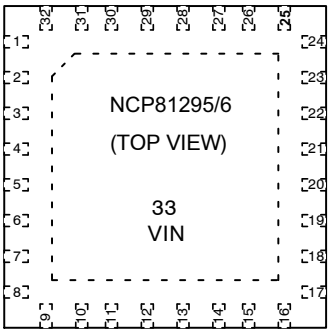

For more details see Figure 1.

ORDERING INFORMATION

See detailed ordering and shipping information on page 2 of this data sheet.

© Semiconductor Components Industries, LLC, 2017

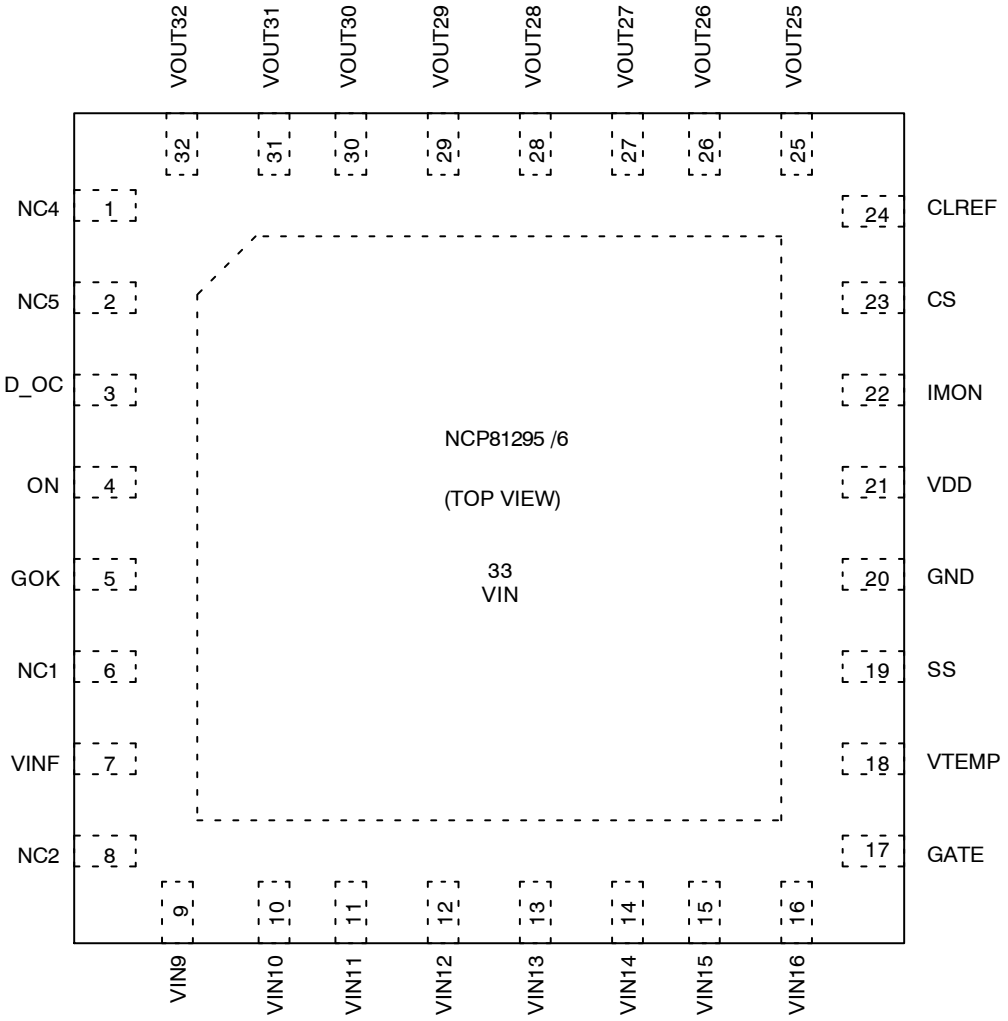

Figure 1. Pin Configuration

Ordering Information

Table 1. AVAILABLE DEVICES

Device	Package	Shipping†
NCP81295MNTXG	QFN32	2500 / Tape & Reel
NCP81296MNTXG	QFN32	2500 / Tape & Reel

†For information on tape and reel specifications, including part orientation and tape sizes, please refer to our Tape and Reel Packaging Specifications Brochure, BRD8011/D.

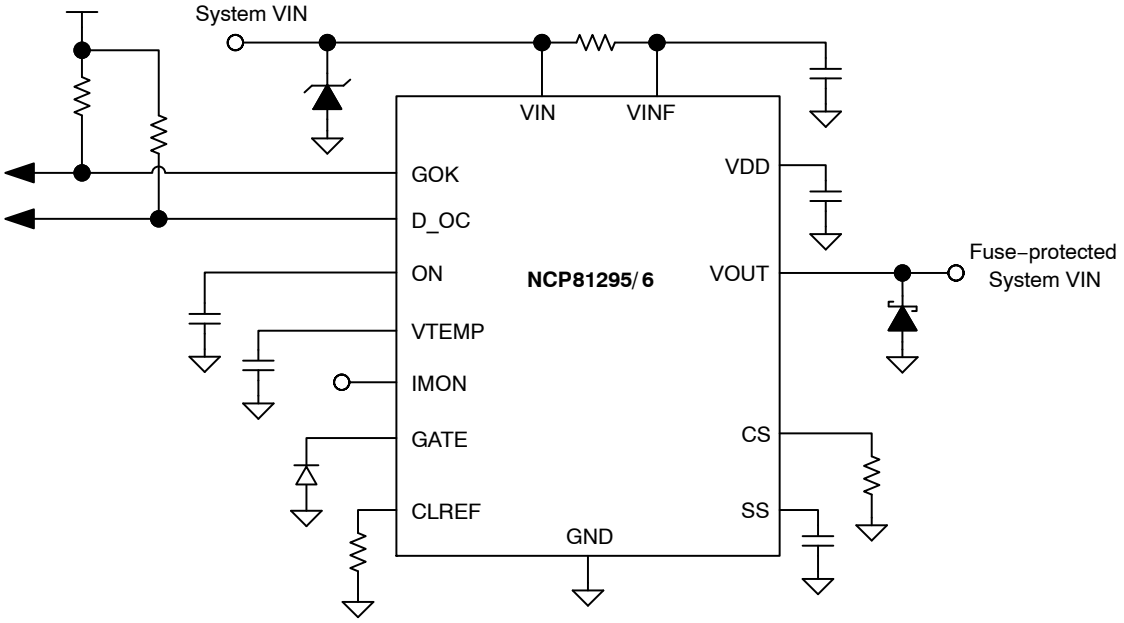

Figure 2. Typical Application

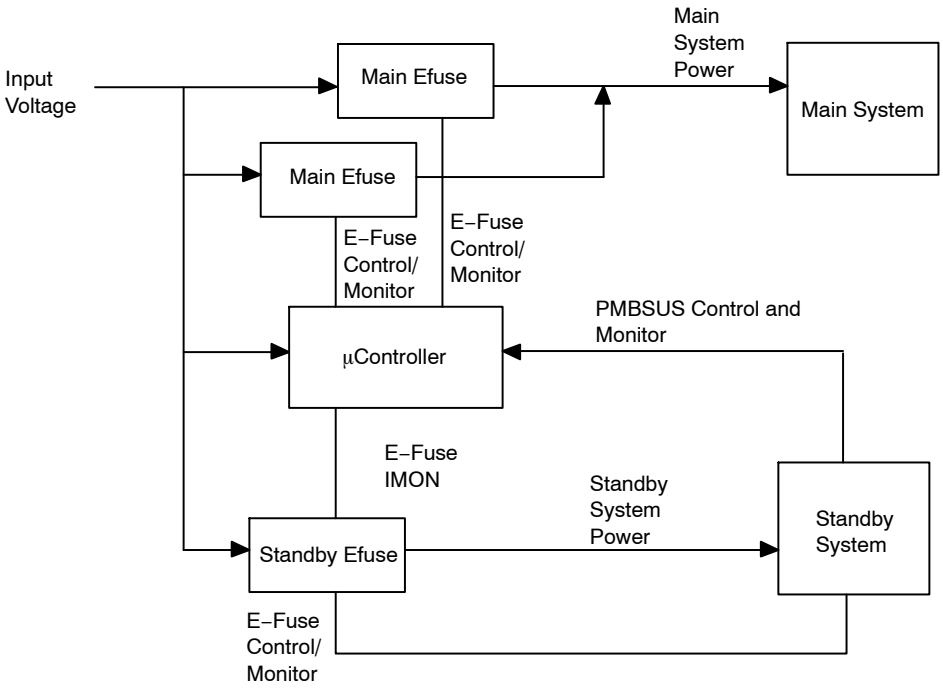

Figure 3. Typical Application Diagram

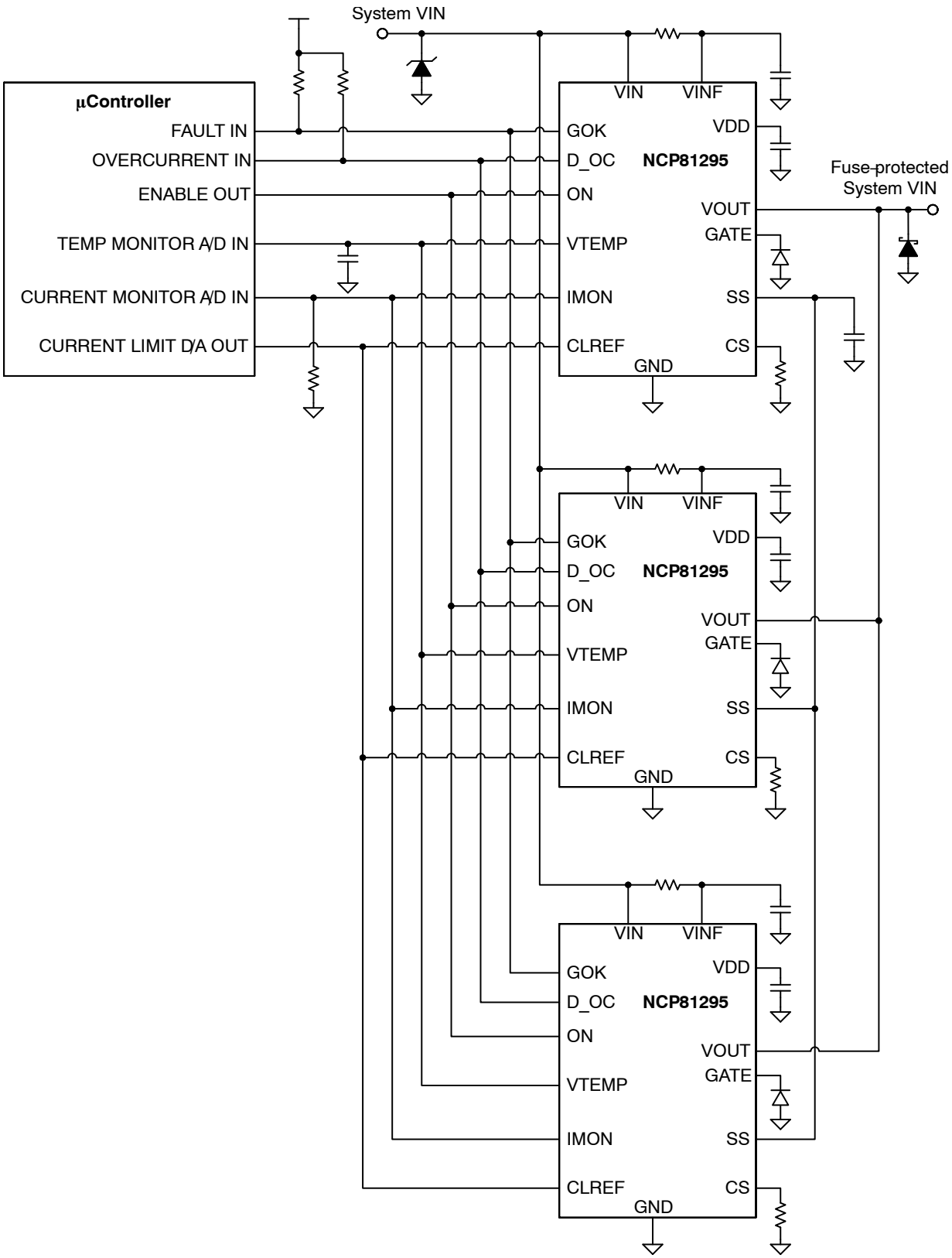

Figure 4. Application Schematic – Parallel Fuse Operation with Controller

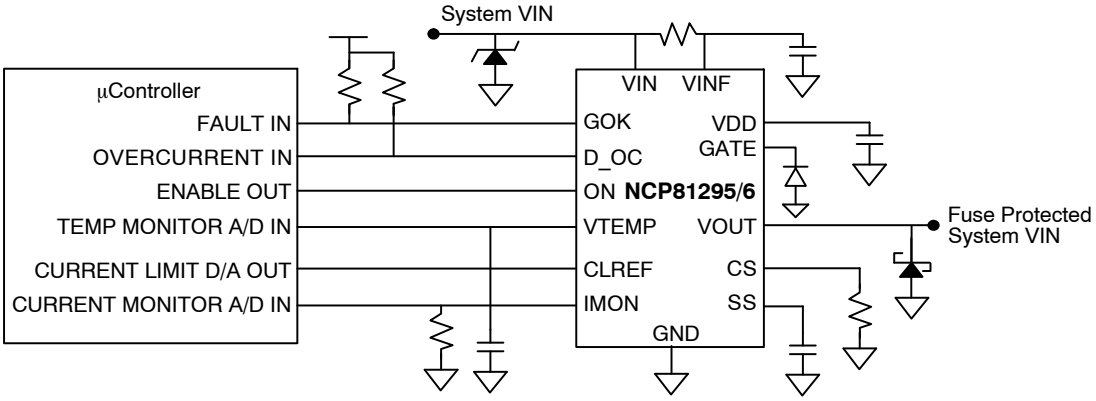

Figure 5. Application Schematic – Single EFuse with Controller

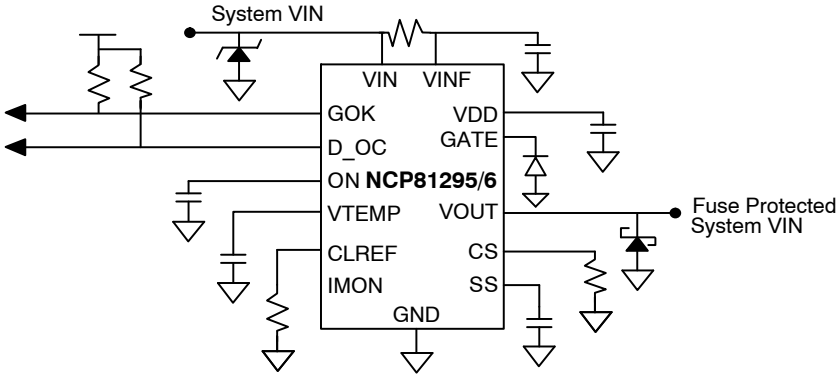

Figure 6. Application Schematic – Stand–alone Single EFuse

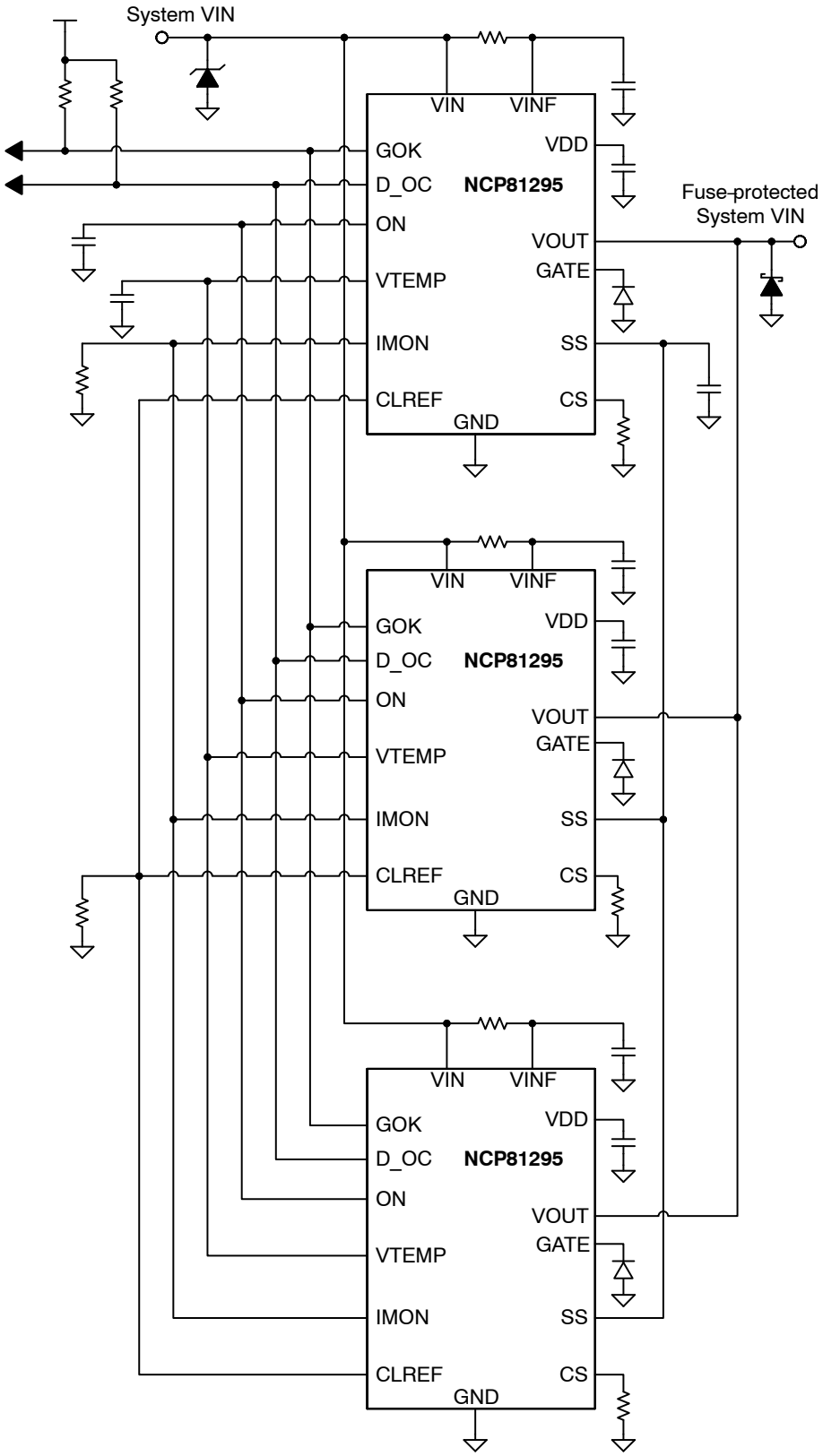

Figure 7. Application Schematic – Stand–alone Parallel EFuse

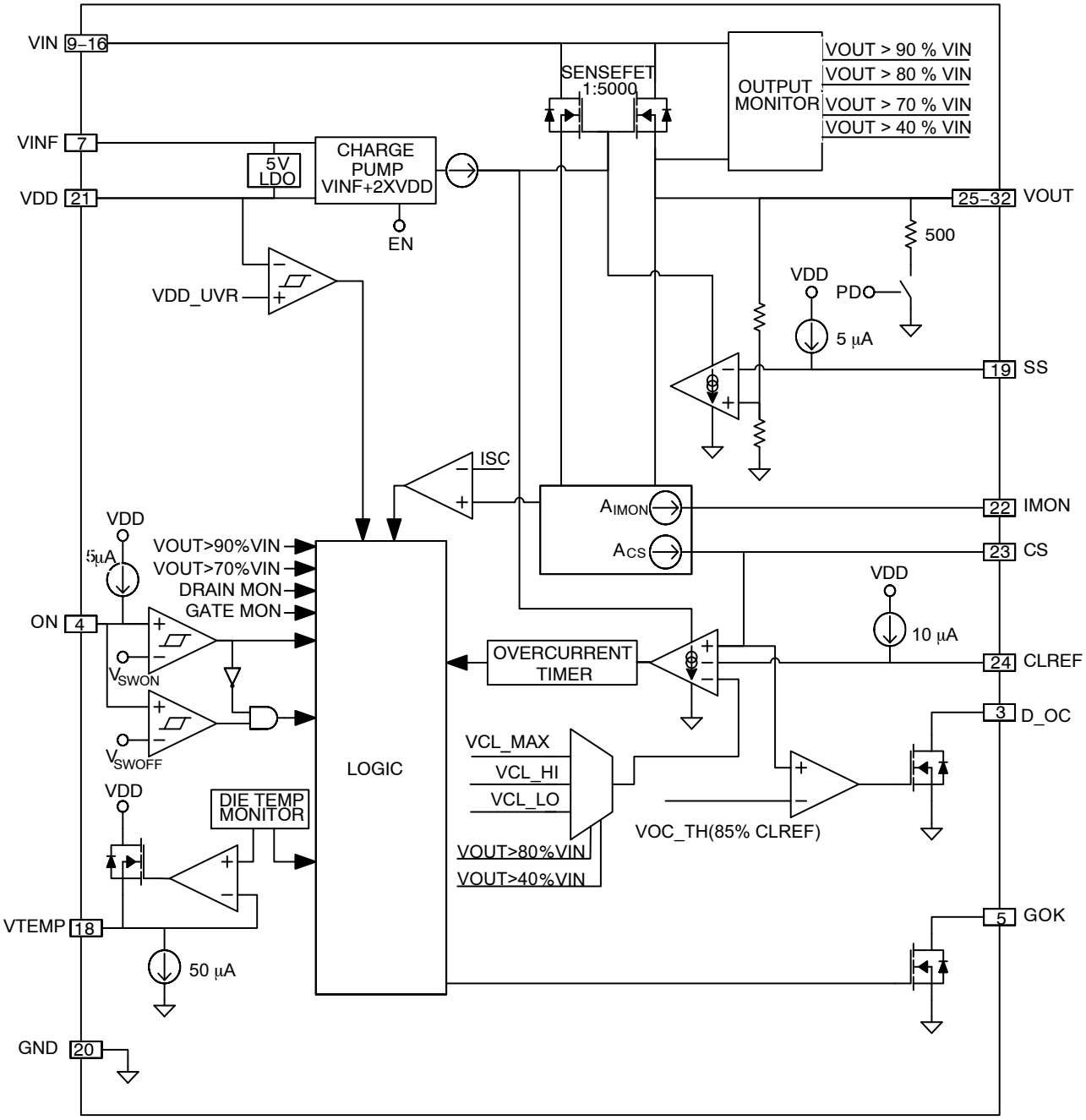

Figure 8. Block Diagram

Table 2. PIN DESCRIPTION

Pin No.	Symbol	Description
1	NC4	No electrical connection internally. May connect to any potential
2	NC5	No electrical connection internally. May connect to any potential
3	D_OC	Overcurrent indicator output (open drain). Low indicates the NCP81295 is limiting current. The D_OC output does not report current limiting during soft−start.
4	ON	Enable input and output pulldown resistance control.
5	GOK	OK status indicator output (open drain). Low indicates that the NCP81295 was turned off by a fault.
6	NC1	Test pin. Do not connect to this pin. Leave floating
7	VINF	Control circuit power supply input. Connect to VIN pins through an RC filter. (1 Ω / 0.1 μF)
8	NC2	Internal FET sense pin. Do not connect to this pin. Leave floating
9	VIN09	Input of high current output switch
10	VIN10	Input of high current output switch
11	VIN11	Input of high current output switch
12	VIN12	Input of high current output switch
13	VIN13	Input of high current output switch
14	VIN14	Input of high current output switch
15	VIN15	Input of high current output switch
16	VIN16	Input of high current output switch
17	GATE	Internal FET gate pin. Connect to the cathode of an anode grounded diode such as BAS16P2T5G. A 4.7 nF ceramic capacitor is reserved between this pin and GND for NCP81295 to mitigate the oscillation risk when small amount of output capacitance (< 100 μF) or long input/output cable (large L_{IN} / L_{OUT}) happens.
18	VTEMP	Analog temperature monitor output.
19	SS	Soft Start time programming pin. Connect a capacitor to this pin to set the softstart time.
20	GND	Ground
21	VDD	Linear regulator output
22	IMON	Analog current monitor output
23	CS	Current sense feedback output (current). Scaling the voltage developed at this pin with a resistor to ground makes this also an input for several current limiting functions and overcurrent indicator D_OC.
24	CLREF	Current limit setpoint input for normal operation (after soft−start).
25	VOUT25	Output of high current output switch
26	VOUT26	Output of high current output switch
27	VOUT27	Output of high current output switch
28	VOUT28	Output of high current output switch
29	VOUT29	Output of high current output switch
30	VOUT30	Output of high current output switch
31	VOUT31	Output of high current output switch
32	VOUT32	Output of high current output switch
33	VIN33	Input of high current output switch

Table 3. MAXIMUM RATINGS

Rating	Symbol	Min	Max	Unit
Pin Voltage Range (Note 1) Vout enabled	VINx, VINF	−0.3	20	V
Pin Voltage Range (Note 1) Vout disabled (Note 2)	VINx, VINF	−0.3	30	V
Pin Voltage Range (Note 1)	VOUTx	−0.3 −1(<500 ms)	20	V
Pin Voltage Range (Note 1)	VDD	−0.3	6.0	V
Pin Voltage Range (Note 3)	All Other Pins	−0.3	VDD + 0.3	V
Operating Junction Temperature	$T_{J(max)}$		150	°C
Storage Temperature Range	T_{STG}	−55	150	°C
Lead Temperature Soldering Reflow (SMD Styles Only), Pb−Free Versions (Note 4)	T_{SLD}		260	°C
Electrostatic Discharge − Charged Device Model	ESD_{CDM}		2.0	kV
Electrostatic Discharge − Human Body Model	ESD_{HBM}		2.5	kV

Stresses exceeding those listed in the Maximum Ratings table may damage the device. If any of these limits are exceeded, device functionality should not be assumed, damage may occur and reliability may be affected.

1. All signals referenced to GND unless noted otherwise.
2. Vout disable is the state of output OFF when internal FET has turned off by disable ON or FAULTs protection.
3. Pin ratings referenced to VDD apply with VDD at any voltage within the VDD Pin Voltage Range.
4. For information, please refer to our Soldering and Mounting Techniques Reference Manual, SOLDERRM/D

Table 4. THERMAL CHARACTERISTICS

Rating	Symbol	Value	Unit
Thermal Resistance, Junction−to−Ambient (Note 5)	$R_{\theta JA}$	30	°C/W
Thermal Resistance, Junction−to−Top−Case	$R_{\theta JCT}$	50	°C/W
Thermal Resistance, Junction−to−Bottom−Case	$R_{\theta JCB}$	1.5	°C/W
Thermal Resistance, Junction−to−Board (Note 6)	$R_{\theta JB}$	1.5	°C/W
Thermal Resistance, Junction−to−Case (Note 7)	$R_{\theta JC}$	1.5	°C/W

5. $R_{\theta JA}$ is obtained by simulating the device mounted on a 500 mm^2, 1−oz Cu pad on a 80 mm x 80 mm, 1.6 mm thick 8−layer FR4 board.
6. $R_{\theta JB}$ value based on hottest board temperature within 1 mm of the package.
7. $R_{\theta JC} \approx R_{\theta JCT} // R_{\theta JCB}$ (Two−Resistor Compact Thermal Model, JESD15−3).

Table 5. RECOMMENDED OPERATING RANGES

Parameter	Symbol	Min	Max	Unit
VIN, VINF Pin Voltage Range		4.5	18	V
Maximum Continuous Output Current	I_{AVE}		50	A
Peak Output Current	I_{PEAK}		60	A
VDD Output Load Capacitance Range	C_{VDD}	2.2	10	μF
VTEMP Output Load Capacitance Range	C_{VTEMP}	0.1		μF
Softstart Duration	T_{SS}	10	100	ms
CS Load Resistance Range	R_{CS}	1.8	4	kΩ
CLREF Voltage Range	V_{CLREF}	0.2	1.4	V
Operating Junction Temperature	$T_{J(OP)}$	−40	125	°C

Functional operation above the stresses listed in the Recommended Operating Ranges is not implied. Extended exposure to stresses beyond the Recommended Operating Ranges limits may affect device reliability.

Table 6. ELECTRICAL CHARACTERISTICS (VINx = VINF = 12.0 V, V_{ON} = 3.3 V, C_{VINF} = 0.1 μF, C_{VDD} = 4.7 μF, C_{VTEMP} = 0.1 μF, R_{VTEMP} = 1 kΩ, C_{SS} = 100 nF (unless specified otherwise) Min/Max values are valid for the temperature range −40°C ≤ T_A = T_J ≤ 125°C unless noted otherwise, and are guaranteed by design and characterization through statistical correlation.

Parameter	Symbol	Test Conditions	Min	Typ	Max	Units
VINF INPUT						
Quiescent Current		V_{ON} > 1.4 V, no load		3.23	5.0	mA
		V_{ON} > 1.4 V, fault			5.0	mA
		V_{ON} < 0.8 V		2.38	4.0	mA
		V_{ON} < 0.8 V, VINF = 16 V			4.0	mA
VDD REGULATOR						
VDD Output Voltage	V_{DD_NL}	I_{VDD} = 0 mA, VINF = 6 V	4.7	5.09	5.3	V
VDD Load Capability	I_{DDLOAD}	VINF = 5.5 V			30	mA
VDD Current Limit	I_{DD_CL}	VINF = 12 V and VINF = 6 V	50	70		mA
VDD Dropout Voltage		I_{VDD} = 25 mA, VINF = 4.5 V		85	200	mV
UVLO threshold − rising	V_{DD_UVR}		4.1	4.3	4.5	V
UVLO threshold − falling	V_{DD_UVF}		3.8	4.0	4.2	V
ON INPUT						
Bias Current	I_{ON}	From pin into a 0 V or 1.5 V source	4.0	5.0	6.0	μA
Switch ON Threshold	V_{SWON}		1.33	1.4	1.47	V
Switch OFF/ Pulldown Upper Threshold	V_{SWOFF}		1.13	1.2	1.27	V
Pulldown Lower Threshold	V_{PDOFF}			0.8		V
Switch ON Delay Timer	t_{ON}	From ON transitioning above V_{SWON} to SS start	0.6	1.0	2.5	ms
Switch OFF Delay Time (Note 8)	t_{OFF}	From ON transitioning below V_{SWOFF} to GATE pulldown		1.7		μs
ON Current Source Clamp Voltage	V_{ON_CLMP}	Max pullup voltage of current source		3.0		V
Load Pulldown Delay Timer	t_{PD_DEL}	From ON transitioning into the range between V_{SWOFF} and V_{PDOFF}		2.0		ms
Output Pulldown Resistance	R_{PD}	V_{OUT} = 12 V, PD mode = 1		0.77		kΩ
SS PIN						
Bias Current	I_{SS}	From pin into a 0 V or 1 V source	4.62	5.15	5.62	μA
Gain to VOUT	AV_{SS}		9.6	10	10.4	V/V
SS Pulldown Voltage	V_{OL_SS}	0.1 mA into pin during ON delay		22		mV
GOK OUTPUT						
Output Low Voltage	V_{OL_GOK}	I_{GOK} = 1 mA			0.1	V
Off−state Leakage Current	I_{LK_GOK}	V_{GOK}= 5 V			1.0	μA

Product parametric performance is indicated in the Electrical Characteristics for the listed test conditions, unless otherwise noted. Product performance may not be indicated by the Electrical Characteristics if operated under different conditions.

8. Guaranteed by design or characterization data. Not tested in production.

Table 6. ELECTRICAL CHARACTERISTICS (VINx = VINF = 12.0 V, V_{ON} = 3.3 V, C_{VINF} = 0.1 μF, C_{VDD} = 4.7 μF, C_{VTEMP} = 0.1 μF, R_{VTEMP} = 1 kΩ, C_{SS} = 100 nF (unless specified otherwise) Min/Max values are valid for the temperature range −40°C ≤ T_A = T_J ≤ 125°C unless noted otherwise, and are guaranteed by design and characterization through statistical correlation.

Parameter	Symbol	Test Conditions		Min	Typ	Max	Units
IMON/CS OUTPUT							
IMON or CS Current (single EFuse) Based on 10 μA/A+5 μA	I_{IMON}/I_{CS}	T_J = 0 to 85°C	IOUT = 5 A (Note 8)		55		μA
			IOUT = 10 A (Note 8)		105		μA
			IOUT = 25 A (Note 8)		255		μA
			IOUT = 50 A (Note 8)		505		μA
Accuracy (single EFuse)		T_J = 0 to 85°C	IOUT = 5 A (Note 8)	−6		+6	%
			IOUT = 10 A (Note 8)	−4		+4	%
			IOUT = 25 A (Note 8)	−4		+4	%
			IOUT = 50 A (Note 8)	−4		+4	%
IMON or CS Current Source Clamp Voltage	V_{IM_CLMP}/ V_{CS_CLMP}	Max pullup voltage of current source			3.0		V
Pre−Biased Offset Current Load for Auto−Zero Op−Amp	I_{AZ_BIAS}				5.0		μA
CURRENT LIMIT & CLREF PIN							
Current Limit Voltage	V_{CL_TH}	If V_{CS} > VCL_TH current limiting regulation occurs via gate		95	98	101	%V_{CLREF}
Current Limit Enact Offset Voltage	V_{ENACT}	0.2 V < V_{CLREF} < 1.4 V		−70	−24	12	mV
Current Limit Clamp Voltage	V_{CL_LO}	VOUT < 40% VIN, V_{CLREF} > 0.15 V		135	152	165	mV
	V_{CL_HI}	40% VIN < VOUT < 80% VIN V_{CLREF} > 0.5 V		480	504	520	mV
Max Current Limit Reference Voltage	V_{CL_MX}	VOUT > 80% VIN, V_{CLREF} > 1.6 V		1.55	1.6	1.65	V
Response Time (Note 8)	t_{CL_REG}	V_{CS} > V_{CLREF} until current limiting			200		μs
CLREF Bias Current	I_{CL}	From pin into a 1.2 V source		9.6	10	10.4	μA
CLREF Current Source Clamp Voltage	V_{CL_CLMP}	Max pullup voltage of current source			3.0		V
FET Turn−off Timer	t_{CL_LA}	Delay between current limit detection and FET turn−off (GOK = 0)			250		μs
D_OC OUTPUT							
Overcurrent Threshold	VOC_TH	If V_{CS} > VOC_TH D_OC pin pulls low		83	86	90	%V_{CLREF}
Output Low Voltage	V_{OL_DOC}	I_{DOC} = 1 mA				0.1	V
Off−state Leakage Current	I_{LK_DOC}	V_{DOC}= 5 V		–		1.0	μA
Delay (rising) (Note 8)		V_{CS} < limit until D_OC rising		–	1.0		μs
Delay (falling) (Note 8)		V_{CS} > limit until D_OC falling		–	1.0		μs

Product parametric performance is indicated in the Electrical Characteristics for the listed test conditions, unless otherwise noted. Product performance may not be indicated by the Electrical Characteristics if operated under different conditions.

8. Guaranteed by design or characterization data. Not tested in production.

Table 6. ELECTRICAL CHARACTERISTICS (VINx = VINF = 12.0 V, V_{ON} = 3.3 V, C_{VINF} = 0.1 μF, C_{VDD} = 4.7 μF, C_{VTEMP} = 0.1 μF, R_{VTEMP} = 1 kΩ, C_{SS} = 100 nF (unless specified otherwise) Min/Max values are valid for the temperature range −40°C ≤ T_A = T_J ≤ 125°C unless noted otherwise, and are guaranteed by design and characterization through statistical correlation.

Parameter	Symbol	Test Conditions	Min	Typ	Max	Units
SHORT CIRCUIT PROTECTION						
Current Threshold (Note 8)	I_{SC}	NCP81295		100		A
		NCP81296		80		A
Response Time (Note 8)	t_{SC}	From I_{OUT} > I_{LIMSC} until gate pulldown		500		ns
VTEMP OUTPUT						
Bias Voltage	$V_{VTEMP25}$	At 25°C		450		mV
Gain (Note 8)	A_VTEMP	0˚C ≤ T_J ≤ 125˚C		10		mV/°C
Load Capability	R_VTEMP	At 25°C		1		kΩ
Pulldown Current	I_VTEMP	At 25°C		50		μA
THERMAL SHUTDOWN						
Temperature Shutdown (Note 8)	T_{TSD}	GOK pulls dow		140		°C
OUTPUT SWITCH (FET)						
On Resistance	R_{DSon}	T_J = 25°C		0.65	1.0	mΩ
Off−state leakage current	I_{DSoff}	VIN = 16 V, V_{ON} < 1.2 V, T_J = 25°C			1.0	μA
FAULT detection						
V_{DS} Short Threshold	VDS_TH	Startup postponed if VOUT > VDS_TH at V_{ON} > V_{SWON} transition		88.8		%VIN
V_{DS} Short OK Threshold	VDS_OK	Startup resumed if VOUT < VDS_OK anytime after postponed		68.6		%VIN
V_{GD} Short Threshold	VDG_TH	Startup postponed if V_G > VDG_TH at V_{ON} > V_{SWON} transition		3.1		V
V_{GD} Short OK Threshold	VDG_OK	Startup resumed if V_G < VDG_OK anytime after postponed		3.0		V
V_G Low Threshold	VG_TH	Latch/Restart if V_{GD} < VG_TH after t_{SSF_END} or t_{GATE_FLT}		5.4		V
V_{OUT} Low Threshold	V_{OUTL_TH}	Latch/Restart if V_{OUT} < VOUTL_TH after t_{SSF_END}		90		%VIN
Gate Fault Timer (Note 8)	t_{GATE_FLT}	Time from V_{GD} < V_{G_TH} transition after t_{SSF_END} completed		200		ms
Startup Timer Failsafe (Note 8)	t_{SSF_END}	Time from V_{ON} > V_{SWON} transition, Max programmable softstart time		200		ms
AUTO−RETRY (NCP81296)						
Auto−Retry Delay	t_{DLY_RETRY}	Delay from power−down to retry of startup		1000		ms

Product parametric performance is indicated in the Electrical Characteristics for the listed test conditions, unless otherwise noted. Product performance may not be indicated by the Electrical Characteristics if operated under different conditions.

8. Guaranteed by design or characterization data. Not tested in production.

TYPICAL CHARACTERISTICS

Test Conditions: Vin = 12 V, Rcs = 2 kΩ, Css = 200 nF, R_{CLREF} = 121 kΩ, R_{IMON} = 2 kΩ

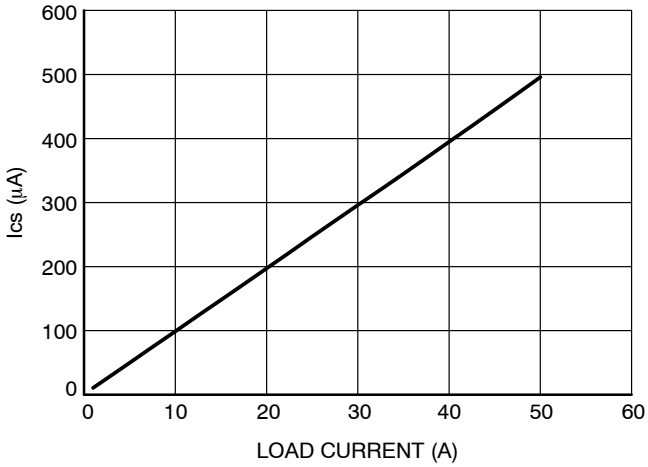

Figure 9. Ics vs. Load Current

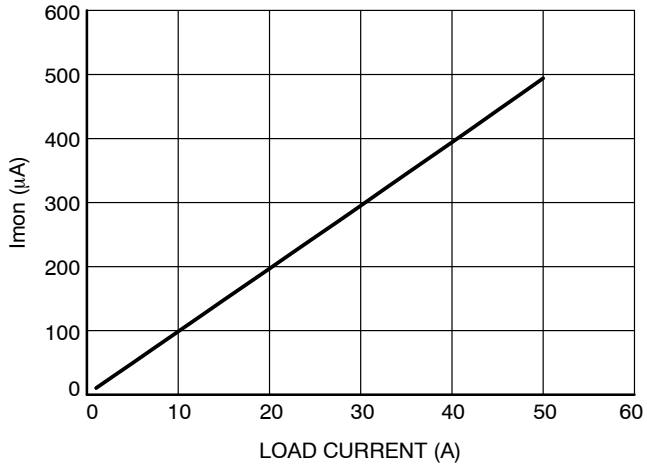

Figure 10. Imon vs. Load Current

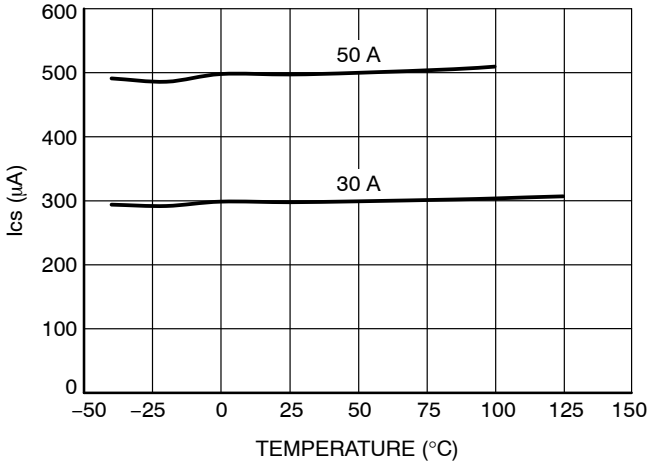

Figure 11. Ics vs. Temperature

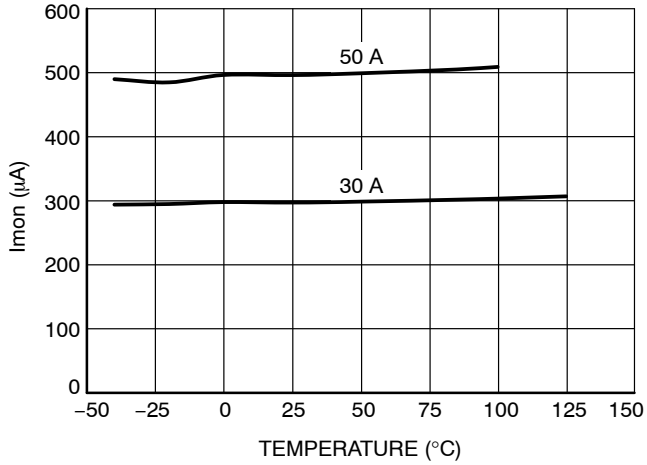

Figure 12. Imon vs. Temperature

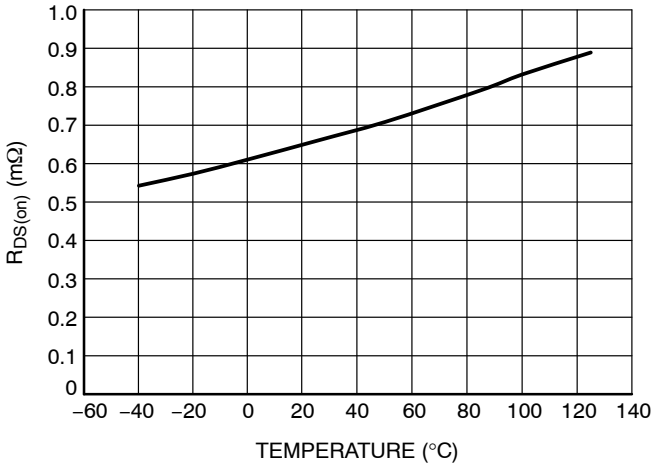

Figure 13. Output Switch $R_{DS(on)}$ @ 22 A vs. Temperature

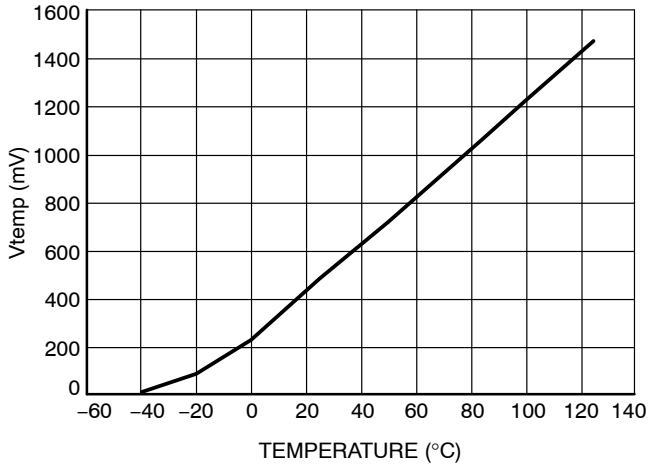

Figure 14. Vtemp vs. Temperature (no load)

TYPICAL CHARACTERISTICS

Test Conditions: Vin = 12 V, Rcs = 2 kΩ, Css = 200 nF, R_{CLREF} = 121 kΩ, R_{IMON} = 2 kΩ

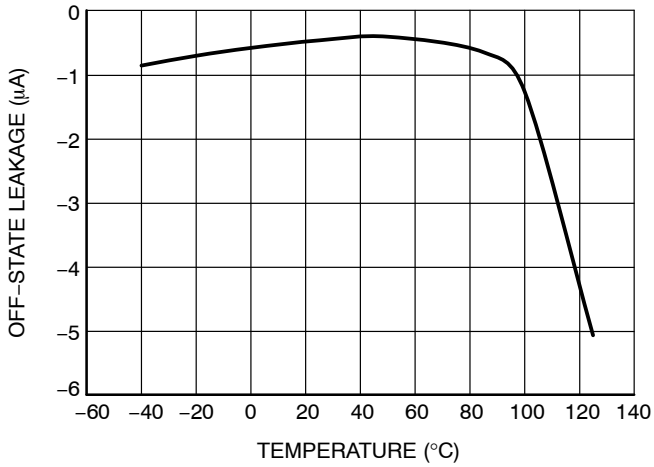

Figure 15. Output Switch Off−state Leakage vs. Temperature

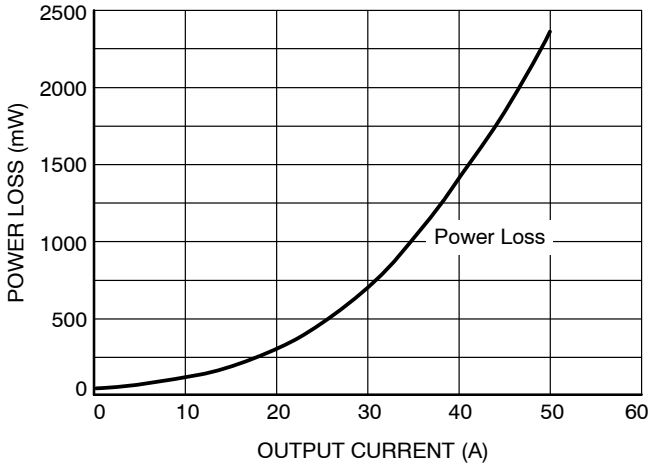

Figure 16. Power Loss vs. Load Current

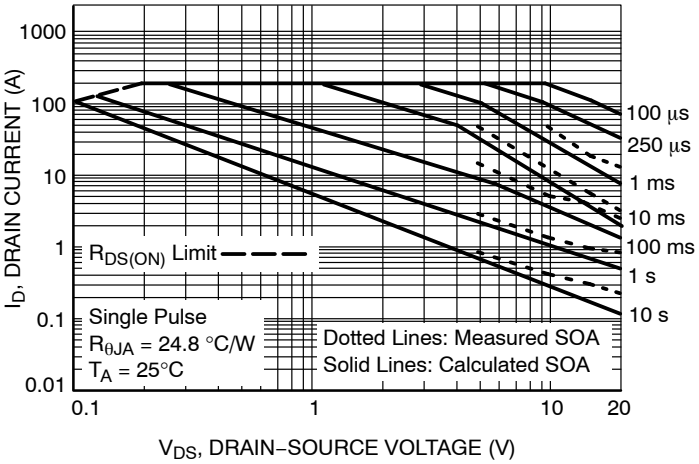

Figure 17. Internal FET's Safe Operating Area (SOA)

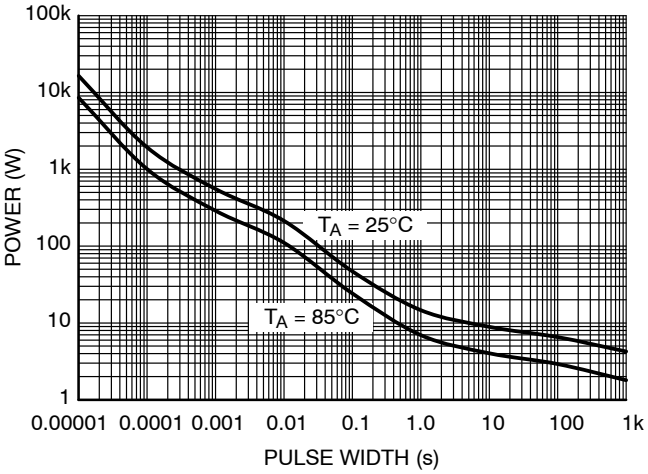

Figure 18. Single Pulse Power Rating (10 μs − 1000 s, Junction−to−Ambient, Note 4)

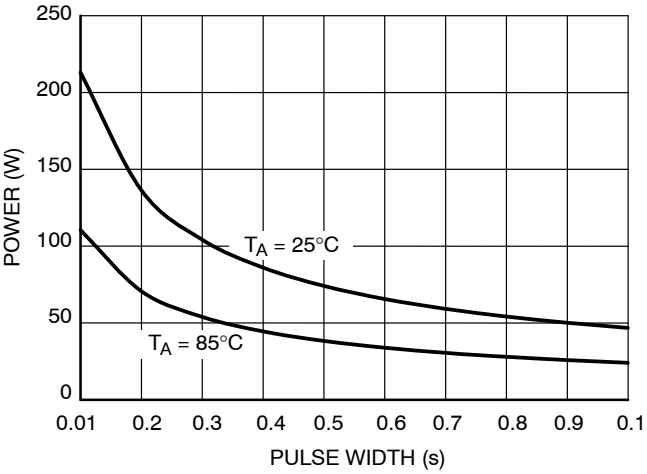

Figure 19. Single Pulse Power Rating (10 ms − 100 ms, Junction−to−Ambient, Note 4)

TYPICAL CHARACTERISTICS

Test Conditions: Vin = 12 V, Rcs = 2 kΩ, Css = 200 nF, R_{CLREF} = 121 kΩ, R_{IMON} = 2 kΩ

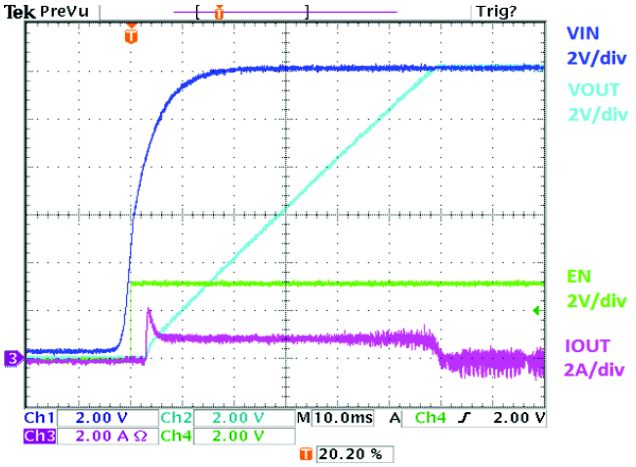

Figure 20. Start Up by VIN (Iout = 0 A)

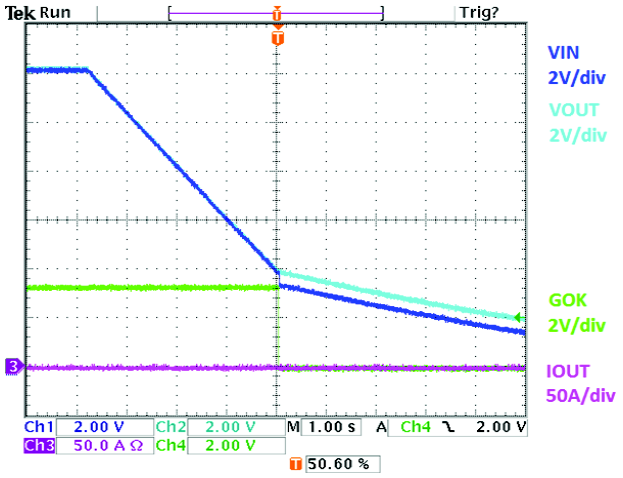

Figure 21. Shut Down by VIN (Iout = 0 A)

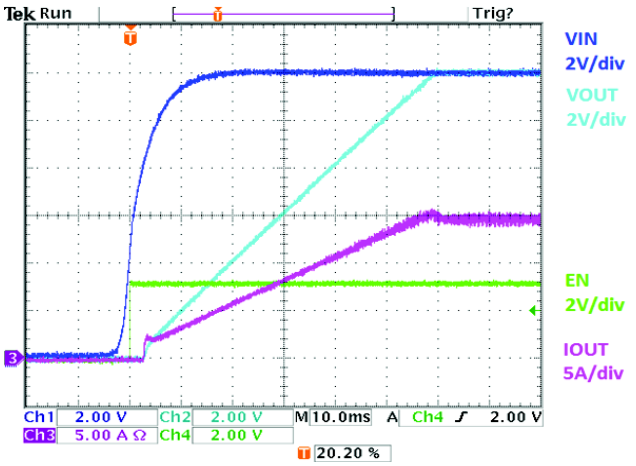

Figure 22. Start Up by VIN (Iout = 15 A)

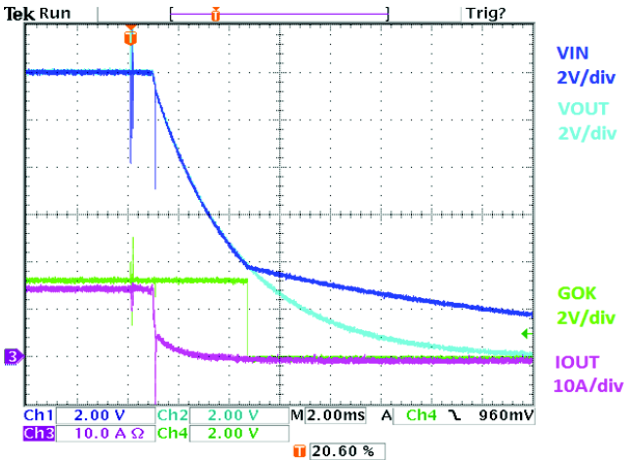

Figure 23. Shut Down by VIN (Iout = 15 A)

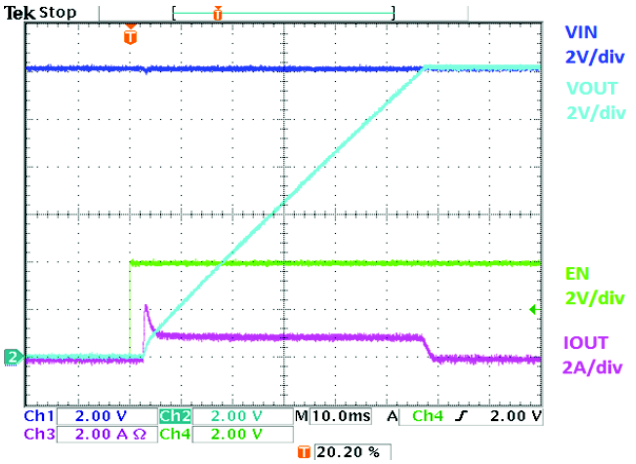

Figure 24. Start Up by EN (Iout = 0 A)

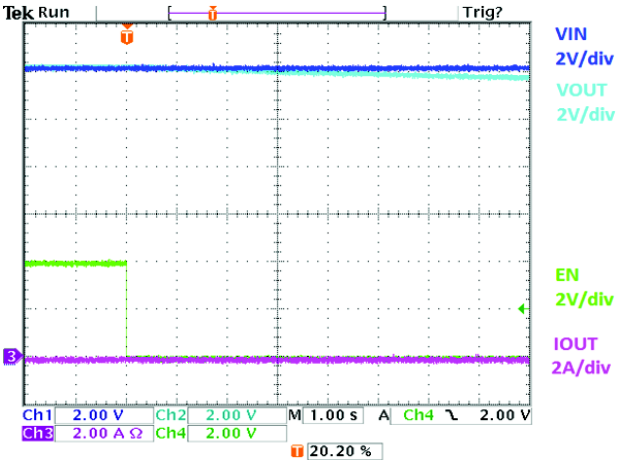

Figure 25. Shut Down by EN (Iout = 0 A)

TYPICAL CHARACTERISTICS

Test Conditions: Vin = 12 V, Rcs = 2 kΩ, Css = 200 nF, R_{CLREF} = 121 kΩ, R_{IMON} = 2 kΩ

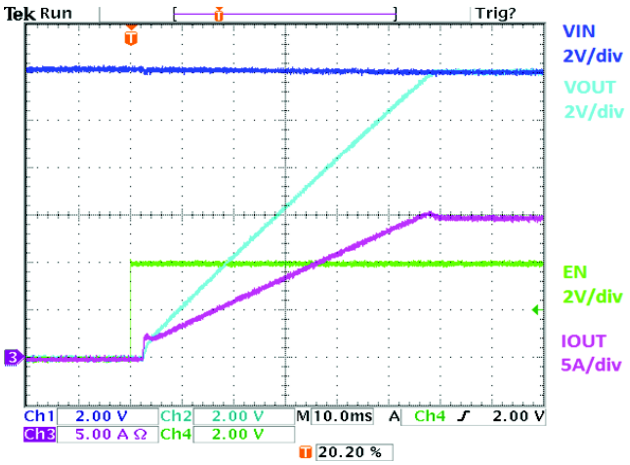

Figure 26. Start Up by EN (Iout = 15 A)

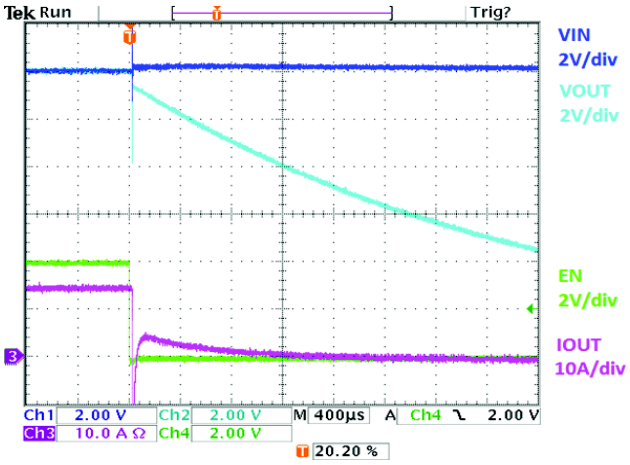

Figure 27. Shut Down by EN (Iout = 15 A)

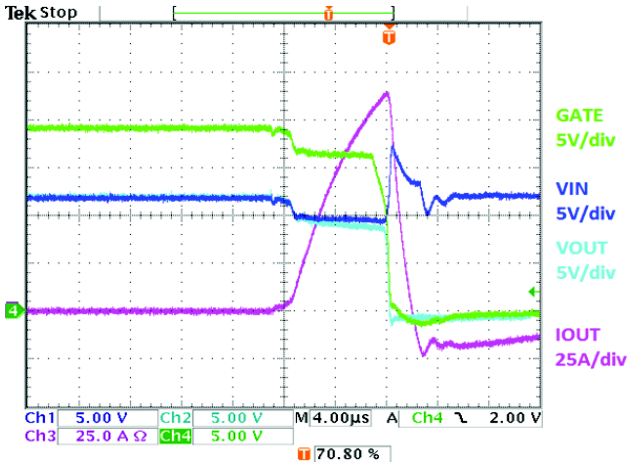

Figure 28. Short Circuit during Normal Operation (Iout = 0 A)

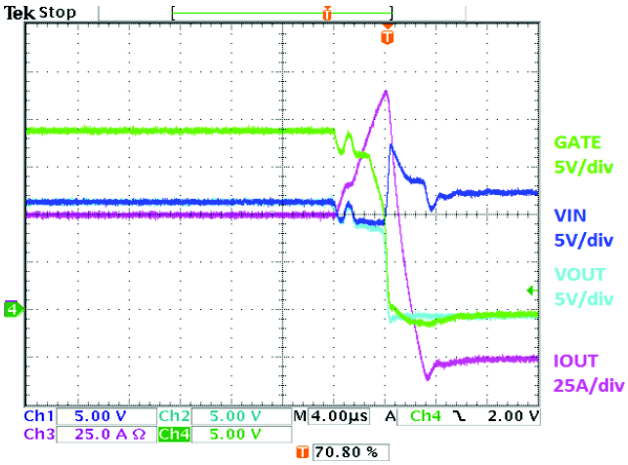

Figure 29. Short Circuit during Normal Operation (Iout = 50 A)

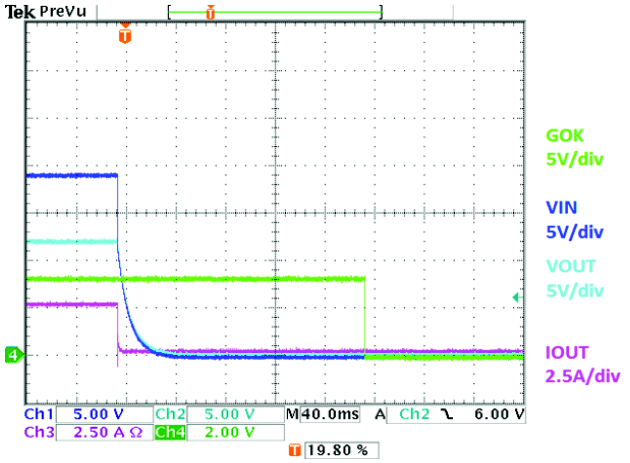

Figure 30. Short FET's Gate During Normal Operation (Iout = 2.5 A)

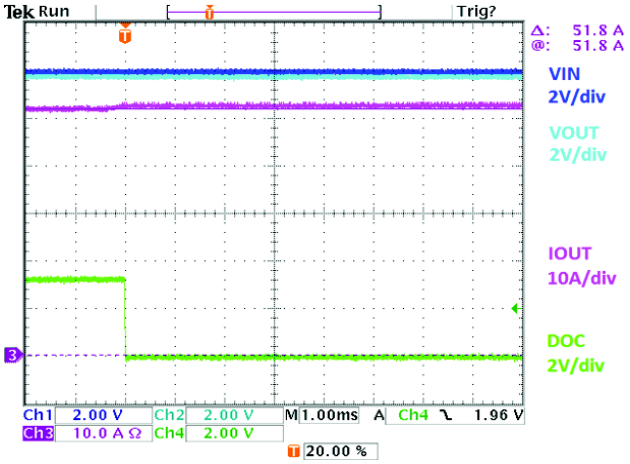

Figure 31. DOC Index for Current Limit during Normal Operation (Iout = 51.8 A)

TYPICAL CHARACTERISTICS

Test Conditions: Vin = 12 V, Rcs = 2 kΩ, Css = 200 nF, R_{CLREF} = 121 kΩ, R_{IMON} = 2 kΩ

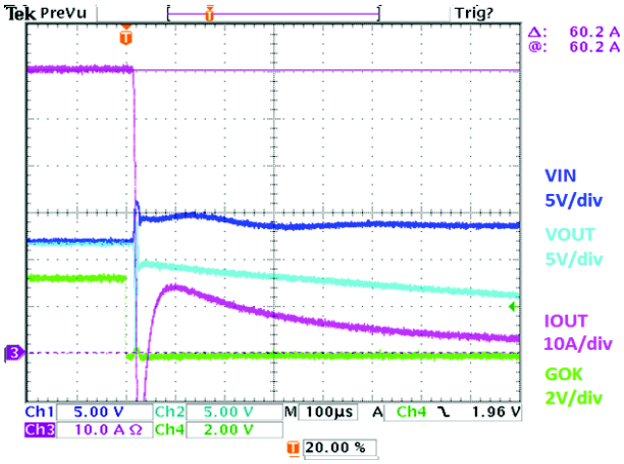

Figure 32. OCP during Normal Operation(Iout=60.2A)

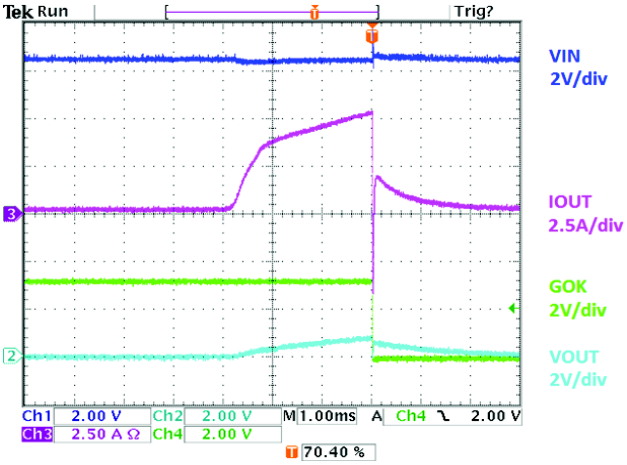

Figure 33. OCP during Power Up by Enable

General Information

The NCP81295/6 is an N−channel MOSFET co−packaged with a smart hotswap controller. It is suited for high−side current limiting and fusing in hot−swap applications. It can be used either alone, or in a paralell configuration for higher current applications.

VDD Output (Auxiliary Regulated Supply)

An internal linear regulator draws current from the VINF pin to produce and regulate voltage at the VDD pin. This auxiliary output supply is current−limited to I_{DD_CL}. A ceramic capacitor in the range of 2.2 μF to 10 μF must be placed between the VDD and GND pins, as close to the NCP81295/6 as possible. The voltage difference between VIN and VINF pin voltage should be within 0.4 V for better CS/IMON performance. Small time constant R/C filter such as 1 Ω/0.1 μF on the VINF pin is recommended.

ON Input (Device Enable)

When the ON pin voltage (V_{ON}) is higher than V_{SWON}, and no undervoltage (UVLO) or output switch faults are present, the output switch turns on. When V_{ON} is lower than V_{SWOFF}, the output switch is off. If V_{ON} is between V_{PDOFF} and V_{SWOFF} for longer than t_{PD_DEL}, the output switches off, and a pulldown resistance to ground, of R_{PD}, is applied to VOUT. In other words, there is behavior as follows:

- When V_{ON} < 0.8 V, FET turns off.
- When 0.8 V < V_{ON} < 1.2 V, VOUT will discharge with ∼ 15 mA.
- When V_{ON} > 1.2 V, FET turns on.

For standalone applications, the ON pin sources current I_{ON}, which can be used to delay output switch turn−on for some time after the appearance of input voltage by connecting a capacitor from the ON pin to ground.

A bi−level control signal driving to ground can be biased up with a resistive divider to produce ON input levels between V_{PDOFF} < V_{ON} < V_{SWON} and V_{ON} > V_{SWON} in order to always apply the output pulldown when the output switch is off.

SS Output (Soft−Start)

When the output switch first turns on, it does so in a controlled manner. The output voltage (VOUT) follows the voltage at the SS pin, produced by current I_{SS} into a capacitor from SS to ground. The duration of soft−start can be programmed by selection of the capacitor value. In parallel fuse applications, the SS pins of all fuses should be shorted together to one shared SS capacitor. Internal soft−start load balancing circuity will ensure the soft−start current is shared between paralleled devices, so as not to stress one device more than another or hit a soft start−current limit.

The soft−start capacitor value can be calculated by:

C_{SS} = (t_{SS} * I_{SS} * AV_{SS})/VIN (where t_{SS} is the target soft−start time). The recommended range of t_{SS} is 10 – 100 ms (see Table 5).

The typical C_{SS} values for different t_{SS} are listed below:

t_{SS} (ms)	C_{SS} (nF)	t_{SS} (ms)	C_{SS} (nF)
10	47	60	270
20	82	70	330
30	120	80	330
40	180	90	470
50	220	100	470

The maximum load capacitor value NCP81295/6 can power up depends on the device soft−start time. When V_{IN} = 12 V, R_{CS} = 2 kΩ, R_{LOAD} = 2.4 Ω, their relationship for different paralleled operations are shown as below chart (above line device shuts down safely due to protection, below line device powers up successfully without trigger protection):

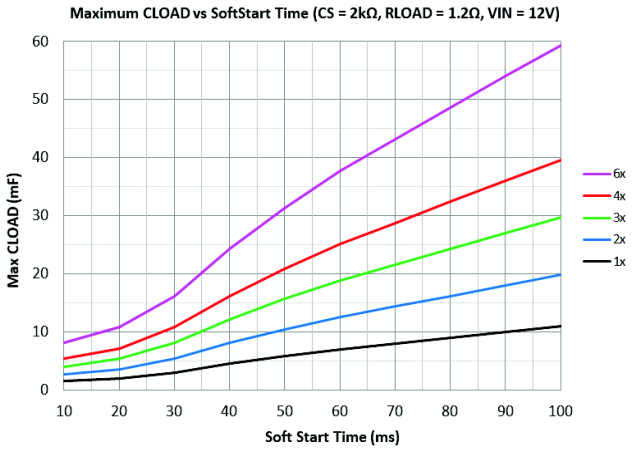

GOK Output (Gate OK)

The GOK pin is an open−drain output that is pulled low to report the fault under the following conditions:

- V_{DD} voltage is below UVLO voltage at any time.
- V_{ON} disabled and V_{DS_OK} is false (indicates a short from VIN to VOUT).
- V_{ON} disabled and V_{DG_OK} is false (indicates a short from GATE to VIN).
- V_{ON} enabled and V_{SS_OK} is false at t_{SSF_END} (indicates VOUT < 90% after soft−start completes – FET latches off for NCP81295/auto−retries for NCP81296).
- V_{ON} enabled and V_G is below V_{G_TH} at t_{SSF_END} (indicates leakage on GATE in startup – FET latches off for NCP81295/auto−retries for NCP81296).
- V_{ON} enabled and V_G is below V_{G_TH} after t_{GATE_FLT} (indicates leakage on GATE during normal operation – FET latches off for NCP81295/auto−retries for NCP81296).
- V_{ON} enabled and a current−limiting condition lasts longer than t_{OC_LA} (FET latches off for NCP81295/auto−retries for NCP81296).

- V_{ON} enabled and device temperature is above T_{TSD} (indicates an over−temperature is detected – FET latches off for NCP81295/auto−retries for NCP81296).

Usually GOK can't be used as power good to indicate the output voltage is in the normal range. Bringing VDD below the UVLO voltage is required to release a latching condition.

IMON Output (Current Monitor)

The IMON pin sources a current that is A_{IMON} (10 μA/A) times the VOUT output current and plus I_{AZ_BIAS}. A resistor connected from the IMON pin to ground can be used to monitor current information as a voltage up to V_{IM_CLMP}. A capacitor of any value in parallel with the IMON resistor can be used to low−pass filter the IMON signal without affecting any internal operation of the device.

CLREF Pin (Current Limit and Over−Current Reference)

The CLREF pin voltage determines the current−limit regulation point and over−current indication point via its interaction with the CS pin voltage. The CLREF voltage can be applied by an external source, such as a hot−swap controller or D−to−A converter, or developed across a programming resistor to ground by the CLREF bias current, I_{CL}. The recommended range of CLREF voltage is 0.2 – 1.4 V (see Table 5).

CS Input/Output (Current Set)

The CS pin is both an input and an output. The CS pin sources a current that is A_{CS} (10 μA/A) times the VOUT current and plus I_{AZ_BIAS}. This produces a voltage on the CS pin that is the product of the CS pin current and an external CS pin resistance to ground.

The voltage generated on V_{CS} determines the D_OC over−current indicator trip point and the current−limit regulation point, via its interaction with the voltage on CLREF pin.

When the voltage on the CS pin is higher than V_{OC_TH} , D_OC is pulled low. If the CS pin voltage drops below V_{OC_TH}, the D_OC pin is released to and gets pulled high by the external pullup resistor. D_OC transitions based on the following formula:

$$I_{OUT} = \frac{\frac{V_{OC_TH} + V_{ENACT}}{R_{CS}} - I_{AZ_BIAS}}{10\ \mu} \qquad \text{(eq. 1)}$$

The V_{OC_TH} trip point is based on a percentage of V_{CLREF} (86%).

During normal operation ($V_{ON} > V_{SWON}$ for longer than t_{SS_END}), if the voltage on the CS pin is above V_{CL_TH} (V_{CL_TH} is clamped at V_{CL_MX} if $V_{CL_TH} > V_{CL_MX}$), then the gate voltage of the FET is modulated to limit current into the output based on the following formula:

$$I_{OUT} = \frac{\frac{V_{CL_TH} + V_{ENACT}}{R_{CS}} - I_{AZ_BIAS}}{10\ \mu} \qquad \text{(eq. 2)}$$

The V_{CL_TH} regulation point is equal to V_{CLREF}.

During startup ($V_{ON} > V_{SWON}$ for less than t_{SS_END}), the current limit reference voltage is clamped according to the following:

- When VOUT < 40% of VIN, $V_{CL_TH} = V_{CL_LO}$ or V_{CLREF} (whichever is lower).
- When VOUT is between 40% and 80% of VIN, $V_{CL_TH} = V_{CL_HI}$ or V_{CLREF} (whichever is lower).
- When VOUT exceeds 80% of VIN, $V_{CL_TH} = V_{CL_MX}$ or V_{CLREF} (whichever is lower).

If a current limiting condition exists anytime for a continuous duration > t_{CL_LA}, then the device latches off (NCP81295) or restarts (NCP81296).

The CS pin must have no capacitive loading other than parasitic device/board capacitance to function correctly. The recommended range of R_{CS} is 1.8 – 4 kΩ (see Table 5).

CS AMP OFFSET BIAS

NCP81295/6 use an auto−zero Op−Amp with low input offset to sense current in FET with high−accuracy, and an pre−biased offset current load, I_{AZ_BIAS} is need for this Op−Amp to always keep it to maintain this low input offset (<100 μV). The internal IMON and CS current source follow below relationship:

$$I_{OUT} = \frac{I_{CS} - I_{AZ_BIAS}}{10\ \mu} \qquad \text{(eq. 3)}$$

and

$$I_{OUT} = \frac{I_{MON} - I_{AZ_BIAS}}{10\ \mu} \qquad \text{(eq. 4)}$$

For typical 5 μA I_{AZ_BIAS}, there has 0.5 A positive off−set in I_{OUT} sense.

D_OC Output (Over−current Indicator)

The D_OC pin is an open−drain output that indicates when an over−current condition exists after soft−start is complete. When the voltage on the CS pin is higher than V_{OC_TH}, D_OC is pulled low. If output current drops below V_{OC_TH}, the D_OC pin is released and gets pulled high by an external pullup resistor.

VTEMP Output (Temperature Indicator)

VTEMP is a voltage output proportional to device temperature, with an offset voltage. The VTEMP output can source much more current than it can sink, so that if multiple VTEMP outputs are connected together, the voltage of all VTEMP outputs will be driven to the voltage produced by the hottest NCP81295/6. A 100 nF capacitor or greater must be connected from the VTEMP pin to ground.

Auto−Retry Restart (NCP81296)

Under certain fault conditions, the FET is turned off and another soft−start procedure takes place. Between the fault and the new soft−start, there is a delay of t_{DLY_RETRY}. The protection features that use this hiccup mode restart are:

- Over−Current
- Short−Circuit Detection
- Over−Temperature
- Excessive Soft−Start Duration
- Gate Leakage

Protection Features

For the following protection features, the FET either latches off (NCP81295) or the FET turns off and initiates a restart (NCP81296), unless noted otherwise.

Excessive Current Limiting

If a current limiting condition exists anytime for a continuous duration > t_{CL_LA}, then the FET latches/restarts.

Excessive Soft−Start Duration

If VOUT < V_{OUTL_TH} when t_{SSF_END} expires, then the FET latches/restarts.

Short Circuit Detection

If switch current exceeds I_{SC}, the device reacts within t_{SC}, and the FET latches/restarts. The short−circuit current monitor is independent of CS, CLREF, IMON and current limit setting (cannot be changed externally).

Over−Temperature Shutdown

If the FET controller temperature > T_{TSD}, then the FET latches/restarts.

FET Fault Detection

The device contains various FET monitoring circuits:

- VIN to VOUT short, non−latching/non−auto−retry condition. If the device is disabled and VOUT > V_{DS_TH} then GOK is pulled low and the device is prevented from powering up. The device is allowed to power up once VOUT < V_{DS_OK}.
- GATE to VIN short, non−latching/non−auto−retry condition. If the device is disabled and GATE (Pin 8) > V_{DG_TH}, then GOK is pulled low and device is prevented from powering up. The device allowed to power up once GATE < V_{DG_OK}.
- GATE leakage − startup. If (GATE – VINF) < V_{G_TH} at t_{SSF_END}, then GOK is pulled low and FET latches/restarts.
- GATE leakage − normal operation. If (GATE – VINF) < V_{G_TH} for t_{GATE_FLT} time after the soft−start timer completes, then GOK is pulled low and device latches/restarts.

FET SOA Limits

In−built timed current limits and fault−monitoring circuits ensure the copackaged FET is always kept within SOA limits.

Multiple Fuse Power Up

When multiple NPC81295 are paralleled together as shown in Figure 4, the NPC81295s will turn on together. Keeping the current through each switch within 1 A (typical) helps to prevent overstress on each switching during soft−start.

Due to NCP81296 is featured by Auto−Retry Mode protection, please follow the below reference schematic of NCP81296 for paralleled operation.

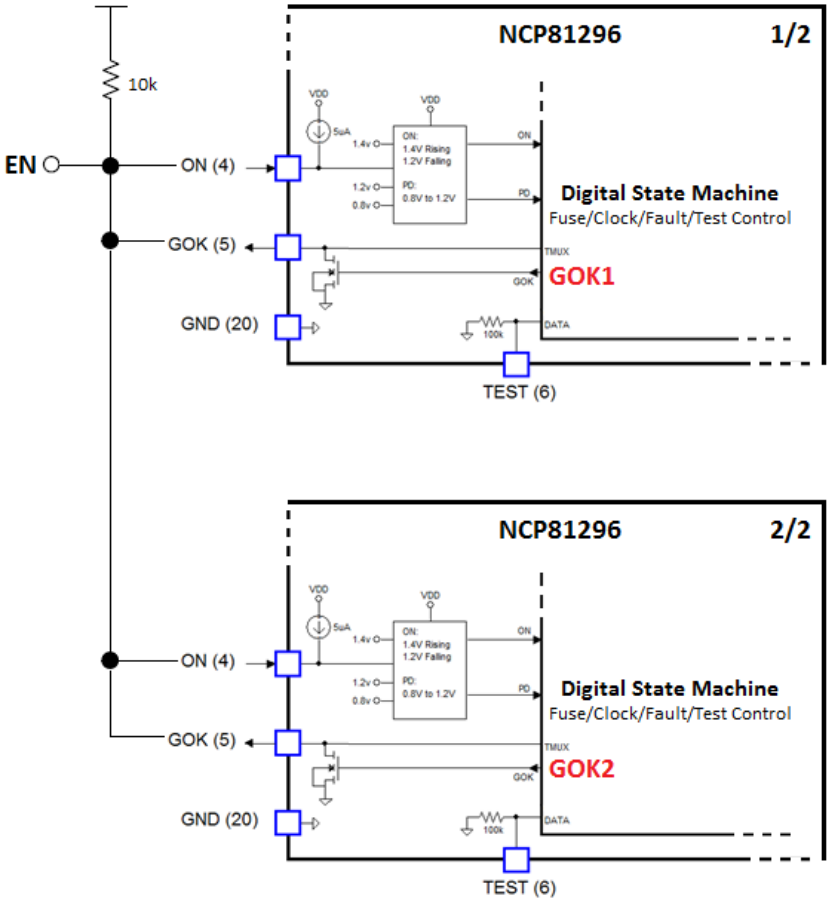

When paralleled multiple NPC81295 encounter fault, the system can recover the E−fuse by resetting their VDD with below buffer and reset circuit.

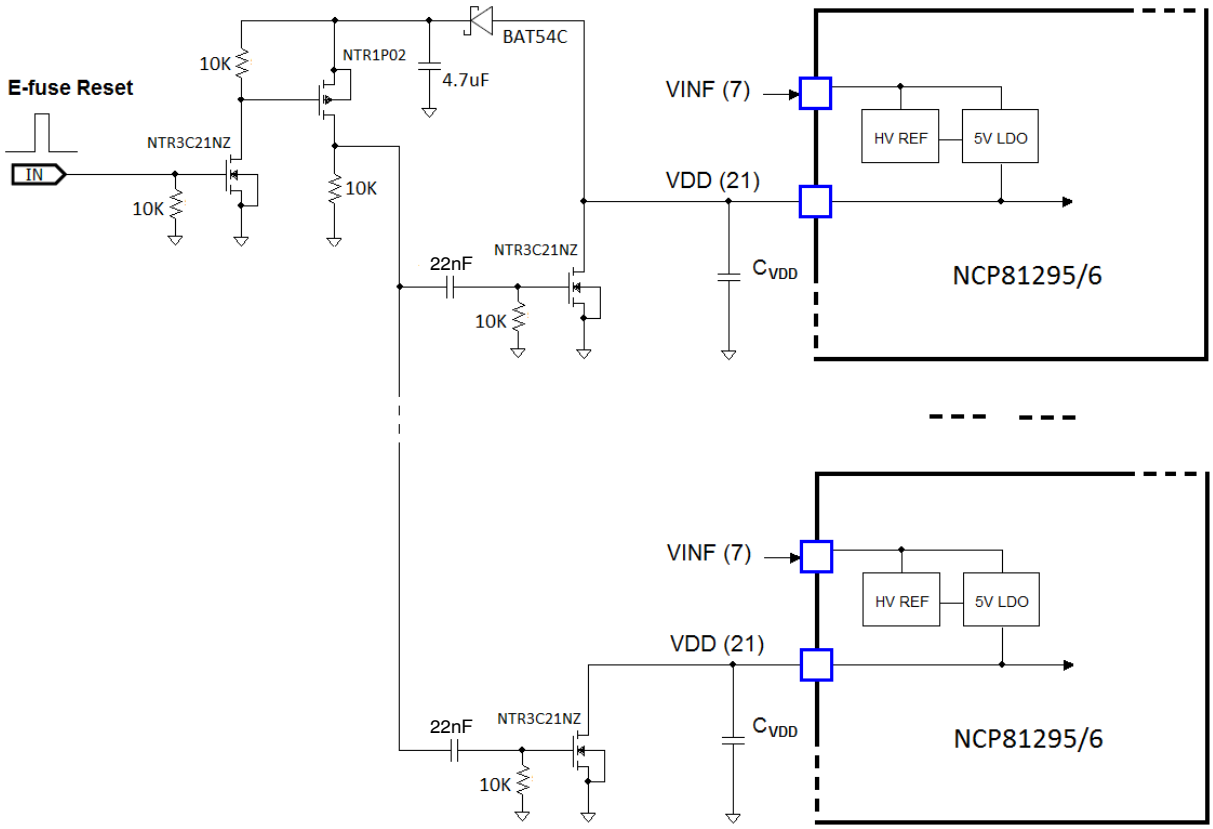
E-fuse Reset
IN
10K
NTR3C21NZ
10K
NTR1P02
10K
4.7uF
BAT54C
22nF
NTR3C21NZ
10K
VINF (7)
VDD (21)
HV REF
5V LDO
CVDD
NCP81295/6
VINF (7)
VDD (21)
HV REF
5V LDO
22nF
NTR3C21NZ
10K
CVDD
NCP81295/6

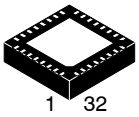

SCALE 2:1

LQFN32 5x5, 0.5P
CASE 487AA
ISSUE A

DATE 03 OCT 2017

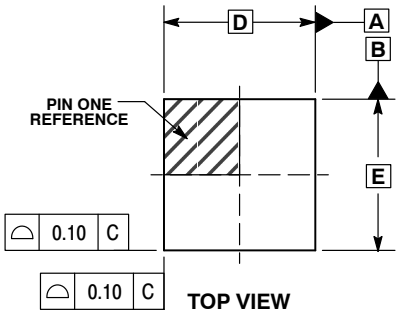

TOP VIEW

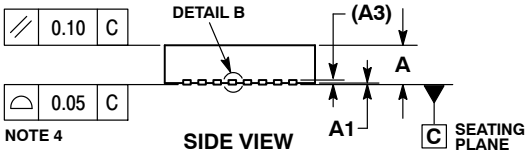

SIDE VIEW

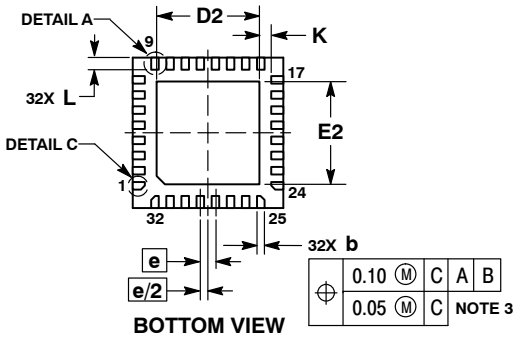

BOTTOM VIEW

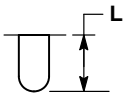

DETAIL A
ALTERNATE CONSTRUCTION

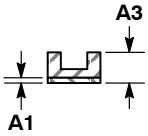

DETAIL B
ALTERNATE CONSTRUCTION

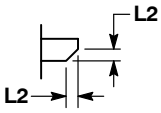

DETAIL C
4 PLACES

NOTES:
1. DIMENSIONING AND TOLERANCING PER ASME Y14.5M, 1994.
2. CONTROLLING DIMENSION: MILLIMETERS.
3. DIMENSION b APPLIES TO PLATED TERMINAL AND IS MEASURED BETWEEN 0.15 AND 0.30 MM FROM THE TERMINAL TIP.
4. COPLANARITY APPLIES TO THE EXPOSED PAD AS WELL AS THE TERMINALS.

DIM	MILLIMETERS MIN	MILLIMETERS MAX
A	1.20	1.40
A1	---	0.05
A3	0.20 REF	
b	0.18	0.30
D	5.00 BSC	
D2	3.30	3.50
E	5.00 BSC	
E2	3.30	3.50
e	0.50 BSC	
L	0.30	0.50
L2	0.13 REF	

GENERIC MARKING DIAGRAM*

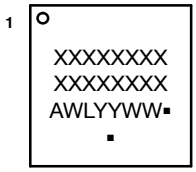

XXXXX = Specific Device Code
A = Assembly Location
WL = Wafer Lot
YY = Year
WW = Work Week
▪ = Pb−Free Package

(Note: Microdot may be in either location)

*This information is generic. Please refer to device data sheet for actual part marking.
Pb−Free indicator, “G” or microdot “ ▪”, may or may not be present. Some products may not follow the Generic Marking.

RECOMMENDED SOLDERING FOOTPRINT*

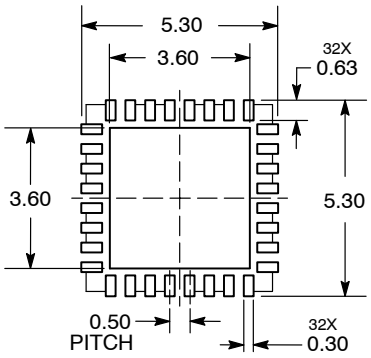

DIMENSIONS: MILLIMETERS

*For additional information on our Pb−Free strategy and soldering details, please download the ON Semiconductor Soldering and Mounting Techniques Reference Manual, SOLDERRM/D.

DOCUMENT NUMBER:	98AON11454G	Electronic versions are uncontrolled except when accessed directly from the Document Repository. Printed versions are uncontrolled except when stamped “CONTROLLED COPY” in red.
DESCRIPTION:	LQFN32, 5x5, 0.5P	PAGE 1 OF 1

ON Semiconductor and ON are trademarks of Semiconductor Components Industries, LLC dba ON Semiconductor or its subsidiaries in the United States and/or other countries. ON Semiconductor reserves the right to make changes without further notice to any products herein. ON Semiconductor makes no warranty, representation or guarantee regarding the suitability of its products for any particular purpose, nor does ON Semiconductor assume any liability arising out of the application or use of any product or circuit, and specifically disclaims any and all liability, including without limitation special, consequential or incidental damages. ON Semiconductor does not convey any license under its patent rights nor the rights of others.

© Semiconductor Components Industries, LLC, 2019

onsemi, onsemi, and other names, marks, and brands are registered and/or common law trademarks of Semiconductor Components Industries, LLC dba "**onsemi**" or its affiliates and/or subsidiaries in the United States and/or other countries. **onsemi** owns the rights to a number of patents, trademarks, copyrights, trade secrets, and other intellectual property. A listing of **onsemi**'s product/patent coverage may be accessed at www.onsemi.com/site/pdf/Patent−Marking.pdf. **onsemi** reserves the right to make changes at any time to any products or information herein, without notice. The information herein is provided "as−is" and **onsemi** makes no warranty, representation or guarantee regarding the accuracy of the information, product features, availability, functionality, or suitability of its products for any particular purpose, nor does **onsemi** assume any liability arising out of the application or use of any product or circuit, and specifically disclaims any and all liability, including without limitation special, consequential or incidental damages. Buyer is responsible for its products and applications using **onsemi** products, including compliance with all laws, regulations and safety requirements or standards, regardless of any support or applications information provided by **onsemi**. "Typical" parameters which may be provided in **onsemi** data sheets and/or specifications can and do vary in different applications and actual performance may vary over time. All operating parameters, including "Typicals" must be validated for each customer application by customer's technical experts. **onsemi** does not convey any license under any of its intellectual property rights nor the rights of others. **onsemi** products are not designed, intended, or authorized for use as a critical component in life support systems or any FDA Class 3 medical devices or medical devices with a same or similar classification in a foreign jurisdiction or any devices intended for implantation in the human body. Should Buyer purchase or use **onsemi** products for any such unintended or unauthorized application, Buyer shall indemnify and hold **onsemi** and its officers, employees, subsidiaries, affiliates, and distributors harmless against all claims, costs, damages, and expenses, and reasonable attorney fees arising out of, directly or indirectly, any claim of personal injury or death associated with such unintended or unauthorized use, even if such claim alleges that **onsemi** was negligent regarding the design or manufacture of the part. **onsemi** is an Equal Opportunity/Affirmative Action Employer. This literature is subject to all applicable copyright laws and is not for resale in any manner.

PUBLICATION ORDERING INFORMATION

LITERATURE FULFILLMENT:
Email Requests to: orderlit@onsemi.com

onsemi Website: www.onsemi.com

TECHNICAL SUPPORT
North American Technical Support:
Voice Mail: 1 800−282−9855 Toll Free USA/Canada
Phone: 011 421 33 790 2910

Europe, Middle East and Africa Technical Support:
Phone: 00421 33 790 2910
For additional information, please contact your local Sales Representative

◊