SERIES HCTR HCT

RoHS Compliant

Traditional First Quality

High Current Toroidal Inductors



Actual Size
(HCT-44X)



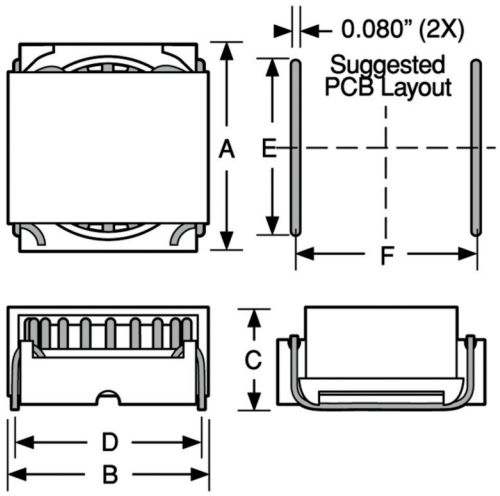

Physical Parameters:

Package	A Max.	B Max.	C Max.	D	E	F
HCT-44X	0.665	0.665	0.400	0.560	0.490	0.560
HCT-50X	0.740	0.740	0.400	0.630	0.560	0.630
HCT-68X	0.945	0.940	0.400	0.820	0.700	0.820

Above dimensions in inches and unless otherwise stated all tolerances are ± 0.010

Mechanical Configuration
Units are surface mount, low profile, self-leaded devices

Frequency Range 1kHz up to 1 MHz

Operating Temperature Range –30°C to +130°C

Leads Solder tinned

Materials Meet UL94V-0

Optional Tolerances As low as 10% available on some values. **Consult factory for details.**

Maximum Power Dissipation at 25°C Ambient
HCT-44x, 1.0 W
HCT-50x, 1.1 W
HCT-68x, 1.2 W

Marking API; part number.

Example: HCT-504

API
HCT-504

Packaging Bulk; contact factory for tape & reel options.

	ELECTRICAL SPECIFICATIONS @ 25°C							DC AMPS TO PRODUCE A MAXIMUM TEMPERATURE RISE FROM 25°C AMBIENT					
DASH NUMBER*	INDUCTANCE (µH) ± 25%	Q TYPICAL	L & Q TEST FREQUENCY (kHz)	SRF (MHz, TYPICAL)	DC RESISTANCE MAXIMUM (mΩ)	DC RESISTANCE TYPICAL (mΩ)	5°C	15°C	25°C	35°C	45°C	55°C
-441	2.8	33	100	110	3.6	3.2	5.13	8.73	11.00	12.80	14.30	15.60
-442	4.2	29	100	85	5.4	4.7	4.23	7.20	9.14	10.60	11.80	12.80
-443	5.7	29	100	65	7.5	6.4	3.60	6.13	7.78	9.05	10.00	10.90
-444	9.0	26	100	55	11.4	9.8	2.91	4.95	6.28	7.31	8.15	8.87
-501	6.5	25	100	55	6.6	5.8	3.97	6.75	8.56	9.96	11.10	12.00
-502	8.4	23	100	45	8.3	7.2	3.55	6.04	7.66	8.91	9.94	10.80
-503	12.5	23	100	35	11.4	9.8	3.04	5.17	6.56	7.63	8.50	9.25
-504	17.0	22	100	29	17.0	14.6	2.49	4.23	5.37	6.25	6.97	7.58
-681	10.5	35	100	30	6.2	5.3	4.35	7.40	9.39	10.90	12.10	13.20
-682	17.6	35	100	24	12.3	10.7	3.06	5.21	6.60	7.68	8.57	9.32
-683	22.0	30	100	21	17.5	15.0	2.58	4.40	5.58	6.49	7.24	7.87
-684	29.0	30	100	16	25.0	21.5	2.16	3.67	4.66	5.42	6.04	6.57

*Complete part # must include series # PLUS the dash #

270 Quaker Rd., East Aurora NY 14052 • Phone 716-652-3600 • Fax 716-652-4814 • E-mail: apisales@delevan.com • www.delevan.com



API Delevan®

SERIES HCTR HCT

RoHS Compliant

Traditional First Quality

High Current Toroidal Inductors

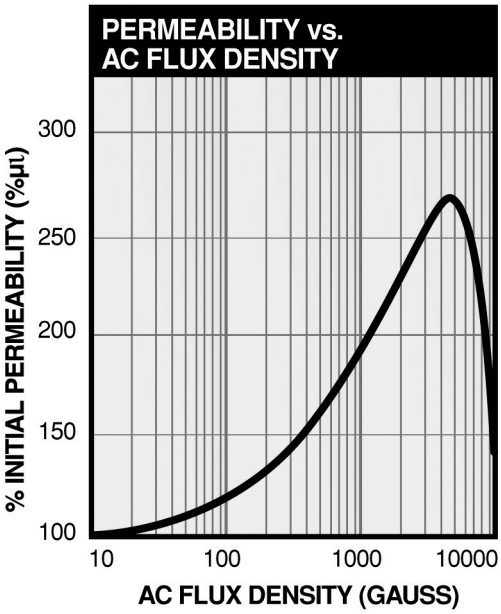

For frequencies ≤ 10 kHz

(mW/cm³) Hz Gauss

Core loss = 1.47×10^{-8} $f^{0.971} B^{2.11}$

For frequencies ≥ 10 kHz

(mW/cm³) Hz Gauss

Core loss = 9.07×10^{-10} $f^{1.26} B^{2.11}$

$$\text{Bpk} = \frac{\text{Erms } 10^8}{4.44 \text{ Anf}}$$

A:

T37 = 0.064 cm²; T44 = 0.099 cm²;
T50 = 0.112 cm²; T68 = 0.179 cm²

This information is intended to be used in assisting the designer in part selection. Each application may contain other variables which must be considered in part selection, such as temperature effects, waveform distortion, etc. API Delevan Sales/Engineering is available to provide information as needed to fit each application.

Data is representative of a DC current with less than 1% ripple and an AC waveform less than: 25 gauss on the HCT-44X, 15 gauss on the HCT-50X and 10 gauss on the HCT-68X.The effect of AC or ripple flux can be significant in many DC inductor applications. When significantly greater AC flux density is present, it becomes necessary to consider its effect on both core loss and permeability (inductance).

All data points, on the above graphs, that exceed the rated DC current specified for a 55°C rise from a 25°C ambient are for design reference only and are not intended to imply continuous use at those DC current levels.

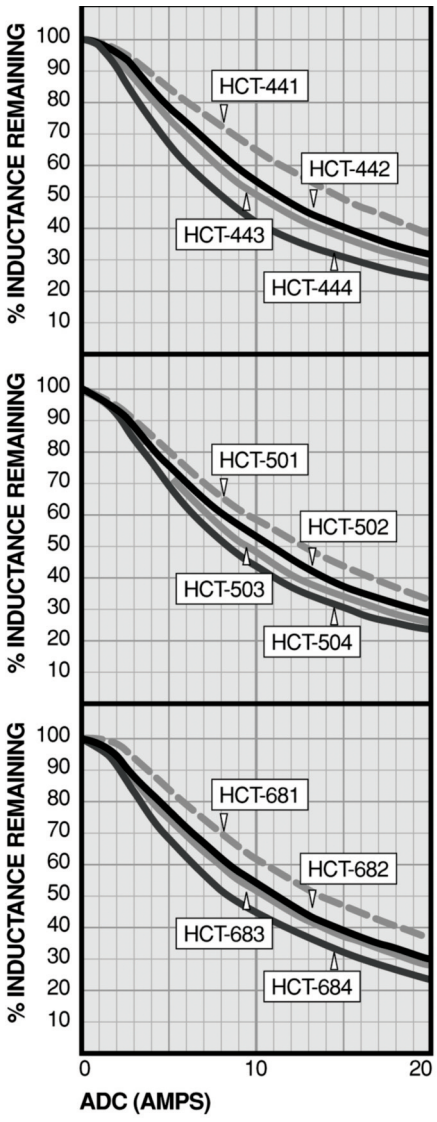

270 Quaker Rd., East Aurora NY 14052 • Phone 716-652-3600 • Fax 716-652-4814 • E-mail: apisales@delevan.com • www.delevan.com



API Delevan®