CUI INC
a bel group

SERIES: ETMA 110W U | DESCRIPTION: MEDICAL AC-DC POWER SUPPLY

FEATURES

- up to 110 W power
- universal input (90~264 Vac)
- single regulated output from 12~24 V
- over voltage, overload and short circuit protections
- medical 60601-1 4th edition safety approvals
- designed for 2 x MOPP applications
- level V efficiency
- custom designs available



MODEL	output voltage (Vdc)	output current max (A)	output power max (W)	ripple and noise[1] max (mVp-p)	efficiency level
ETMA120750U	12	7.5	90	120	V
ETMA135667U	13.5	6.67	90	135	V
ETMA150667U	15	6.67	100	150	V
ETMA190580U	19	5.8	110	190	V
ETMA200550U	20	5.5	110	200	V
ETMA240460U	24	4.6	110	240	V

Notes: 1. At full load, 100 ~ 240 Vac input, 20 MHz bandwidth oscilloscope, each output terminated with 10 µF aluminum electrolytic and 0.1 µF ceramic capacitors.

PART NUMBER KEY

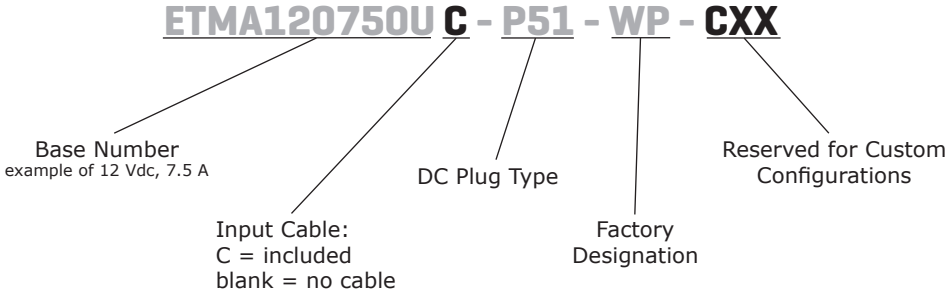

INPUT

parameter	conditions/description	min	typ	max	units
voltage		90		264	Vac
frequency		47		63	Hz
current	at 90 Vac, 50 Hz			2	A
inrush current	at 230 Vac, cold start			70	A
no load power consumption				0.3	W

OUTPUT

parameter	conditions/description	min	typ	max	units
total regulation	19, 20, 24 V outputs all other outputs		±3 ±5		% %
hold-up time	at 115 / 230 Vac, full load	10			ms
temperature coefficient				±0.05	%/°C

PROTECTIONS

parameter	conditions/description				
over voltage protection	13.5 V output 24 V output all other outputs	118 113 120		150 150 150	% % %
overload protection	shutdown and auto restart			160	%
short circuit protection	output shutdown and auto restart				

SAFETY & COMPLIANCE

parameter	conditions/description	min	typ	max	units
isolation voltage	input to output for 2 seconds input to frame ground for 2 seconds			5,656 2,121	Vdc Vdc
insulation resistance	input to output, at 500 Vdc input to frame ground, at 500 Vdc	20 20			MΩ MΩ
safety approvals	medical UL/cUL UL 60601-1, EN 60601-1, CB IEC 60601-1 4th edition				
EMI/EMC	FCC Part 18 Class B, EN 60601-1 Class B, EN 55011 Class B				
leakage current				0.1	mA
MTBF	at 25°C, max. load	100,000			hours
RoHS compliant	yes				

ENVIRONMENTAL

parameter	conditions/description	min	typ	max	units
operating temperature		0		40	°C
storage temperature		-10		70	°C
humidity	non-condensing	10		90	%

MECHANICAL

parameter	conditions/description	min	typ	max	units
dimensions	6.69 x 2.55 x 1.52 (170 x 64.8 x 38.5 mm)				inch
input plug	IEC320 / C14				
weight			0.61		kg

MECHANICAL DRAWING

units: mm

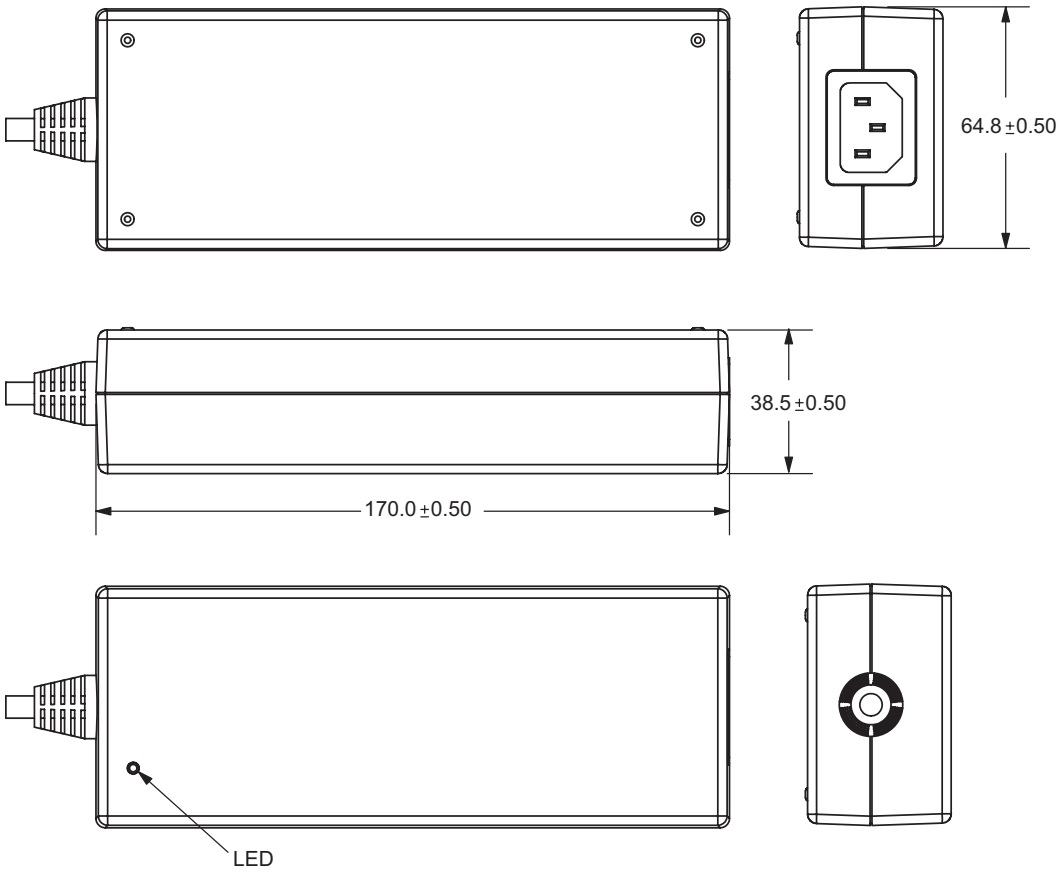

DC CORD

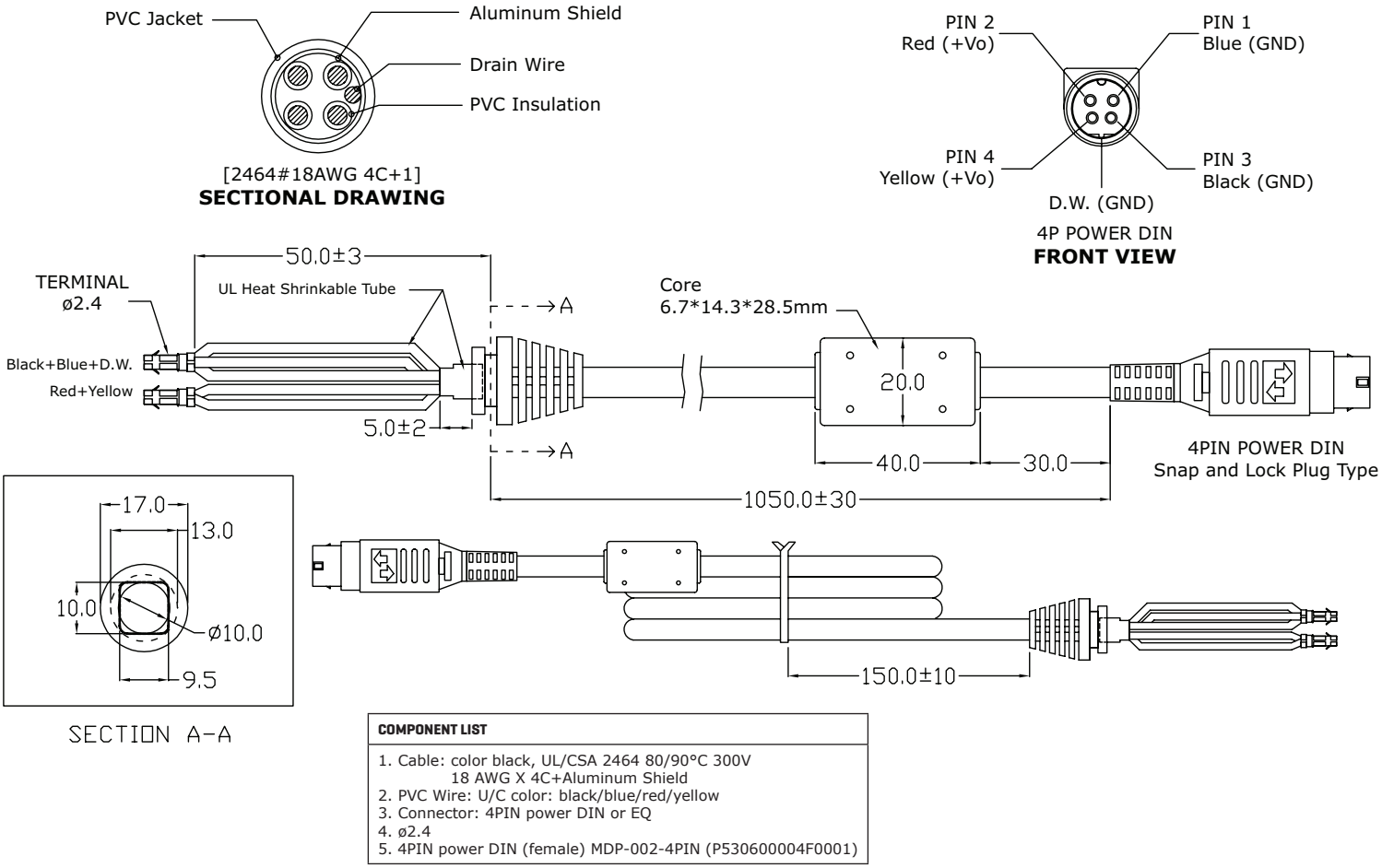

COMPONENT LIST
1. Cable: color black, UL/CSA 2464 80/90°C 300V 18 AWG X 4C+Aluminum Shield 2. PVC Wire: U/C color: black/blue/red/yellow 3. Connector: 4PIN power DIN or EQ 4. ø2.4 5. 4PIN power DIN (female) MDP-002-4PIN (P530600004F0001)

AC CORD

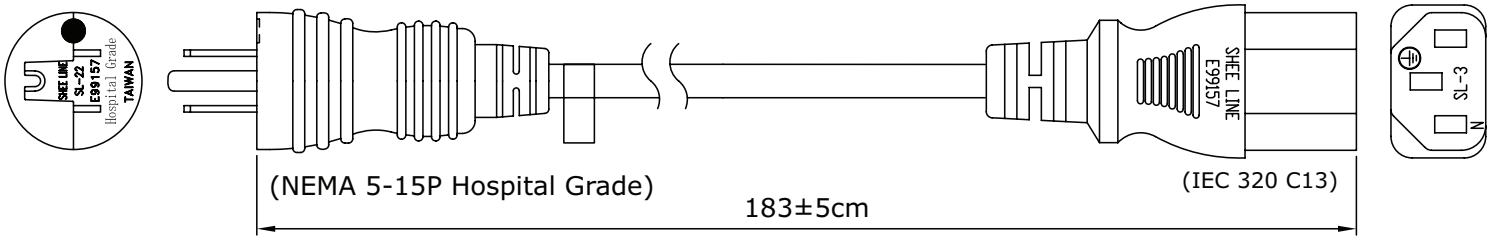

SPECIFICATION:

1) Length: 1.83m
2) Color: black
3) Plug: SL-22 (A)10 (V)125 Approval: UL/cUL
4) Connector: SL-3(A)10 (V)125 Approval: UL/cUL
5) Cable: SJT 18AWG/3C Approval: UL/CSA

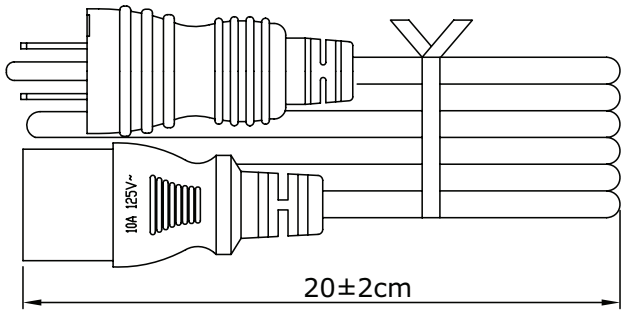

REVISION HISTORY

rev.	description	date
1.0	initial release	06/05/2012
1.01	description and warranty updated	08/21/2012
1.02	replaced TUV approval with Nemko	09/04/2013
1.03	updated to medical 60601-1 4th edition	06/20/2017
1.04	company logo updated	07/23/2020

The revision history provided is for informational purposes only and is believed to be accurate.

CUI INC
a bel group

Headquarters
20050 SW 112th Ave.
Tualatin, OR 97062
800.275.4899

Fax 503.612.2383
cui.com
techsupport@cui.com

This device complies with part 15 of the FCC Rules. Operation is subject to the following two conditions:
(1) This device may not cause harmful interference, and
(2) this device must accept any interference received, including interference that may cause undesired operation.

CUI offers a two (2) year limited warranty. Complete warranty information is listed on our website.

CUI reserves the right to make changes to the product at any time without notice. Information provided by CUI is believed to be accurate and reliable. However, no responsibility is assumed by CUI for its use, nor for any infringements of patents or other rights of third parties which may result from its use.

CUI products are not authorized or warranted for use as critical components in equipment that requires an extremely high level of reliability. A critical component is any component of a life support device or system whose failure to perform can be reasonably expected to cause the failure of the life support device or system, or to affect its safety or effectiveness.