REVISIONS					
REV	ECO	DESCRIPTION	DATE	BY	APPR
A1	–	RELEASE NEW DRAWING	18/OCT/18	BROOK	TOMMY
A2	–	ADD MORE MATERIAL NOTES	25/OCT/18	BROOK	TOMMY

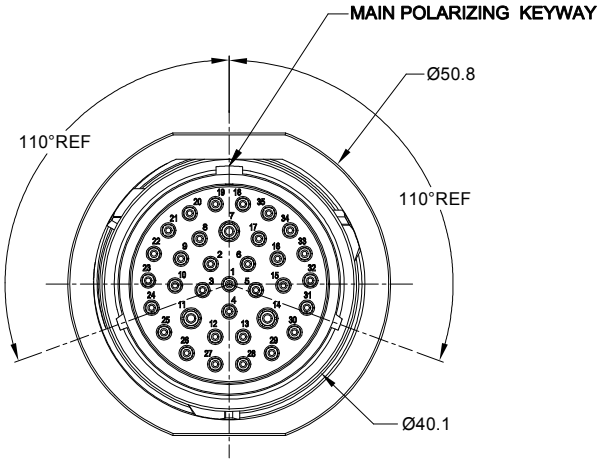

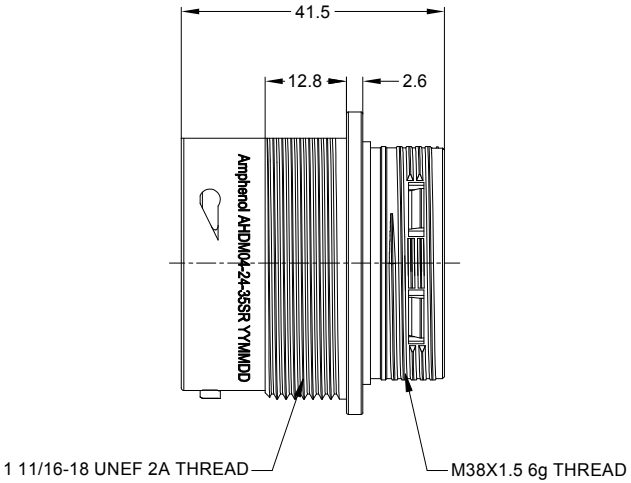

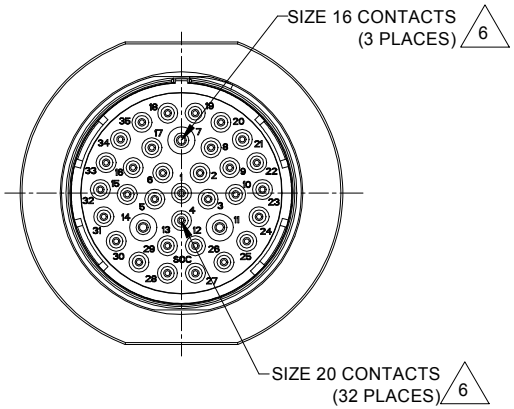

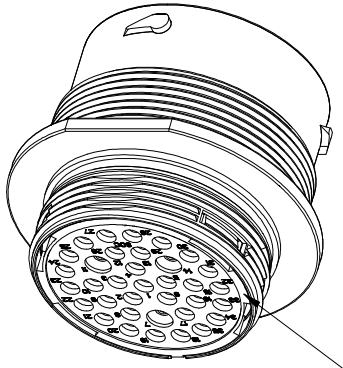

NOTES: UNLESS OTHERWISE SPECIFIED

1. MATERIAL:
   SHELL: ZINC ALLOY, NICKEL PLATED
   INSERT AND RETAINING RING: THERMOPLASTIC
   SEAL: SILICONE RUBBER

2. MODIFICATIONS: THREADED HOUSING; REDUCED DIA. WIRE SEAL

3. SPECIFICATIONS:
   3.1 OPERATING TEMPERATURE: -55℃ TO +125℃.
   3.2 DIELECTRIC WITHSTANDING VOLTAGE: LESS THAN 2 MILLIAMPS CURRENT LEAKAGE @ 1500 VOLTS AC.
   3.3 INSULATION RESISTANCE: 1000 MEGOHM MIN @ 25℃.
   3.4 MOISTURE RESISTANCE: IP67&IP69K (MATED CONDITION).
   3.5 MATING CYCLE DURABILITY: 100 CYCLES
   3.6 RoHS COMPLIANT

4. MATING PART: AHDM06-24-35P* (* = SEAL TYPE)

5. ALL DIMENSIONS ARE FOR REFERENCE USE ONLY.

6 CONTACT SIZE AND WIRE RANGE:

CONTACT SIZE	MIN. INSUL O.D.	MAX. INSUL O.D.	TYPICAL WIRE RANGE	CURRENT RATING
16	1.35 mm (.053 in)	3.05 mm (.120 in)	14-20 AWG	13 AMPS
20	1.02 mm (.040 in)	2.41 mm (.095 in)	16-22 AWG	7.5 AMPS

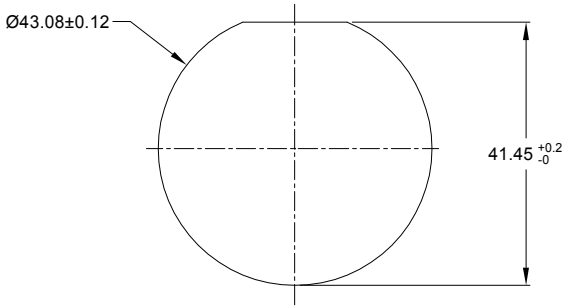

RECOMMENDED PANEL
MOUNTING HOLE

RECOMMENDED PANEL
THICKNESS:1.6 TO 4.7MM

	AHDM04-24-35SR		
	PART NUMBER	DESCRIPTION	ITEM
QUANTITY	MATERIALS LIST		

UNLESS OTHERWISE SPECIFIED
1) All dimensions are in metric(mm).
2) Tolerance are as follows:
1 PL DEC ±0.30 | Fractions ±1/64
2 PL DEC ±0.15 | Angles ±1°
3 PL DEC ±0.08
3) Note reference = X

MATERIAL SPECIFICATIONS:

PROCESS SPECIFICATIONS:

NEXT ASS'Y:

SIGNATURES		DATE
DRAWN:	BROOK	25/OCT/18
CHECKED:	ORION	25/OCT/18
ENGINEER:		
APPROVAL:	TOMMY	25/OCT/18
CUSTOMER:		

THIS DRAWING IS SUPPLIED FOR INFORMATION ONLY. DESIGN FEATURES, SPECIFICATIONS AND PERFORMANCE DATA SHOWN HEREON ARE THE PROPERTY OF THE AMPHENOL CORPORATION. NO RIGHTS OF REPRODUCTION ARE IMPLIED. ALL DIMENSIONS ARE SUBJECT TO NORMAL MANUFACTURING VARIATIONS.

Amphenol

Sine Systems - www.amphenol-sine.com
44724 Morley Drive
Clinton Township, MI 48036

RECPT, 24 SZ 35 SOC, RD, WIDE THD

SIZE	TYPE	DWG NO:	REVISION
B	C-	AHDM04-24-35SR	A2

SCALE: NONE SHEET 1 OF 1

TITLE: RECPT, 24 SZ 35 SOC, RD, WIDE THD
DWG NO: AHDM04-24-35SR
REV: A2
SH: 1
OF: 1

ATM Series™ - Contact Size 20 Options

Machined Contacts, Sockets & Pins				
Part Number	**Description**	**Size**	**AWG**	**Type**
AT60-010-2031	Male Contact - Pin, Gold-plated	20	16-18	Machined
AT62-005-20141	Female Contact - Socket, Gold-plated	20	16-18	Machined
AT60-010-20141	Male Contact - Pin, Nickel-plated	20	16-18	Machined
AT62-005-2031	Female Contact - Socket, Nickel-plated	20	16-18	Machined
AT60-202-2031	Male Contact - Pin, Gold-plated	20	20-22	Machined
AT62-201-2031	Female Contact - Socket, Gold-plated	20	20-22	Machined
AT60-202-20141	Male Contact - Pin, Nickel-plated	20	20-22	Machined
AT62-201-20141	Female Contact - Socket, Nickel-plated	20	20-22	Machined

Tooling - Machined Contacts		
Part	**Part Number**	**Description**
	CA-5D12	Universal Hand Crimp Tool, Size 12/16/20 (Machined contacts only)
	CA-5E12	Pneumatic Crimp Tool, Size 12/16/20 (Machined contacts only)

Contact Removal Tools		
Part	**Part Number**	**Description**
	ATRT-100	Used for removal of contacts for A Series™ products
	AT11-240-2005	Contact Removal Tool, Plastic, Size 20
	AT13-204-2005	Sealing Plug, Size 20, White

Stamped & Formed Contacts, Sockets & Pins				
Part Number	**Description**	**Size**	**AWG**	**Type**
AT60-20-0144	Male Contact - Pin, Gold-plated	20	16-22	Stamped & Formed
AT62-20-0144	Female Contact - Socket, Gold-plated	20	16-22	Stamped & Formed
AT60-20-0244	Male Contact - Socket, Gold-plated	20	16-22	Stamped & Formed
AT62-20-0244	Female Contact - Socket, Gold-plated	20	16-22	Stamped & Formed
AT60-20-0122	Male Contact - Pin, Nickel-plated	20	16-22	Stamped & Formed
AT62-20-0122	Female Contact - Socket, Nickel-plated	20	16-22	Stamped & Formed
AT60-20-0222	Male Contact - Socket, Nickel-plated	20	16-22	Stamped & Formed
AT62-20-0222	Female Contact - Socket, Nickel-plated	20	16-22	Stamped & Formed
AT60-20-0277	Male Contact - Socket, Tin-plated	20	16-22	Stamped & Formed
AT62-20-0277	Female Contact - Socket, Tin-plated	20	16-22	Stamped & Formed
AT60-20-0422	Male Contact - Socket, Nickel-plated	20	20-22	Stamped & Formed
AT62-20-0444	Female Contact - Socket, Gold-plated	20	20-22	Stamped & Formed

Tooling - Stamped & Formed Contacts		
Part	**Part Number**	**Description**
	MFX-3974	Crimp Die - Size 20 (S&F contacts only)
	MFX-3976	Crimp Die - Size 20 (S&F contacts only) 20-22AWG -04XX Series
	MFX-3978	Crimp Die - Size 20 (S&F contacts only) 20-22AWG -02XX Series
	ATT-20-00	Hand Crimp Tool - Size 20, 20AWG (S&F contacts only)

Amphenol Sine Systems
44724 Morley Drive
Clinton Township, MI 48036 USA
www.amphenol-sine.com
09/2021

AT Series™ - Contact Size 16 Options

Machined Contacts, Sockets & Pins				
Part Number	**Description**	**Size**	**AWG**	**Type**
AT60-215-1631	Male Contact - Pin, Gold-plated	16	14	Machined
AT62-209-1631	Female Contact - Socket, Gold-plated	16	14	Machined
AT60-215-16141	Male Contact - Pin, Nickel-plated	16	14	Machined
AT62-209-16141	Female Contact - Socket, Nickel-plated	16	14	Machined
AT60-202-1631	Male Contact - Pin, Gold-plated	16	16-20	Machined
AT62-201-1631	Female Contact - Socket, Gold-plated	16	16-20	Machined
AT60-202-16141	Male Contact - Pin, Nickel-plated	16	16-20	Machined
AT62-201-16141	Female Contact - Socket, Nickel-plated	16	16-20	Machined
AT60-202-1631-22	Male Contact - Pin, Gold-plated	16	22-24	Machined
AT62-201-1631-22	Female Contact - Socket, Gold-plated	16	22-24	Machined
AT60-202-16141-22	Male Contact - Pin, Nickel-plated	16	22-24	Machined
AT62-201-16141-22	Female Contact - Socket, Nickel-plated	16	22-24	Machined

Tooling - Machined Contacts		
Part	**Part Number**	**Description**
	CA-5D12	Universal Hand Crimp Tool, Size 12/16/20 (Machined contacts only)
	CA-5E12	Pneumatic Crimp Tool, Size 12/16/20 (Machined contacts only)

Contact Removal Tools		
Part	**Part Number**	**Description**
	ATRT-100	Used for removal of contacts for A Series™ products
	AT11-310-1605	Contact Removal Tool, Plastic, Size 16
	A114017	Sealing Plug, Size 16, White

Stamped & Formed Contacts, Sockets & Pins				
Part Number	**Description**	**Size**	**AWG**	**Type**
AT60-14-0144	Male Contact - Pin, Gold-plated	16	14-16	Stamped & Formed
AT62-14-0144	Female Contact - Socket, Gold-plated	16	14-16	Stamped & Formed
AT60-14-0122	Male Contact - Pin, Nickel-plated	16	14-16	Stamped & Formed
AT62-14-0122	Female Contact - Socket, Nickel-plated	16	14-16	Stamped & Formed
AT60-16-0144	Male Contact - Pin, Gold-plated	16	16-18	Stamped & Formed
AT62-16-0144	Female Contact - Socket, Gold-plated	16	16-18	Stamped & Formed
AT60-16-0122	Male Contact - Pin, Nickel-plated	16	16-18	Stamped & Formed
AT62-16-0122	Female Contact - Socket, Nickel-plated	16	16-18	Stamped & Formed
AT60-16-0644	Male Contact - Pin, Gold-plated	16	18-20	Stamped & Formed
AT62-16-0644	Female Contact - Socket, Gold-plated	16	18-20	Stamped & Formed
AT60-16-0622	Male Contact - Pin, Nickel-plated	16	18-20	Stamped & Formed
AT62-16-0622	Female Contact - Socket, Nickel-plated	16	18-20	Stamped & Formed
AT60-16-0844	Male Contact - Pin, Gold-plated	16	20-22	Stamped & Formed
AT62-16-0844	Female Contact - Socket, Gold-plated	16	20-22	Stamped & Formed
AT60-16-0822	Male Contact - Pin, Nickel-plated	16	20-22	Stamped & Formed
AT62-16-0822	Female Contact - Socket, Nickel-plated	16	20-22	Stamped & Formed

Tooling - Stamped & Formed Contacts		
Part	**Part Number**	**Description**
	MFX-3950	Crimp Die - Size 16, 18-20AWG (S&F contacts only)
	MFX-3953	Crimp Die - Size 16, 16-18AWG (S&F contacts only)
	MFX-3975	Crimp Die - Size 16, 14-16AWG (S&F contacts only)
	MFX-3990	Crimp Die - Size 16, 20-22AWG (S&F contacts only)
	ATT-16-00	Hand Crimp Tool - Size 16, 14-16AWG (S&F contacts only)
	ATT-16-01	Hand Crimp Tool - Size 16, 18-20AWG (S&F contacts only)
	ATT-1612-03	Hand Crimp Tool - Size 16, 20-22AWG (S&F contacts only)

Amphenol Sine Systems
44724 Morley Drive
Clinton Township, MI 48036 USA
www.amphenol-sine.com
09/2021