UK +44 (0)151 220 2500 // USA +1 855 958 2502 //
www.brainboxes.com // sales@brainboxes.com

US-735

USB-C to 1 Port RS232 Industrial USB to Serial Adaptor

- Our smallest form factor USB-C to serial adaptor
- High retention USB connector for an unshakeable connection
- Comes with 1m USB-B to USB-C cable
- Works where many other USB to Serial devices do not
- Industrial Specification: IP-50
- -40˚C to +80˚C/-40˚F to +176˚F







IP-50 rated non-conducting case



Wall mounting option



High retention USB connection requires a minimum withdrawal requirement of 15N (thats a force of 1.5Kg or 3.4lbs)

UK +44 (0)151 220 2500 // USA +1 855 958 2502 //
www.brainboxes.com // sales@brainboxes.com

US-735 USB-C to 1 Port RS232 Industrial USB to Serial Adaptor

IP-50 rated non-conducting case

High retention USB connector for an unshakeable connection



Plug and play with signed drivers

Orange color-coded insulator to differentiate from standard USB connectors

-40˚C to +80˚C/-40˚F to +176˚F temperature range

USB connection requires a minimum withdrawal requirement of 15N

Wall mounting option

Works across the full spectrum of baud rates up to 921,600 including standard and arbitrary values

Housing & Connectors	
	IP-50 rated non-conducting polyamide case
	DB9 Connector - 9 Pin Male
	High Retention USB Connector
	Wall mounting screw recess
Power Supply	
Power Supply Input	+5V through USB cable (supplied)
Power Consumption	50mA @ 5V
Environmental	
Operating Temperature	-40˚C to +80˚C/-40˚F to +176˚F
Storage Temperature	-40˚C to +80˚C/-40˚F to +176˚F
Port Settings - RS232	
Baud Rate	From 110 - 1 MegaBaud - Any custom Baud rate accepted
Data Bits	5,6,7 or 8
Parity	Odd, Even, None, Mark or Space
Stop Bits	1 or 2
Flow Control	RTS/CTS, DSR/DTR, XON/XOFF
Tx/Rx Modes	Point to Point

UK +44 (0)151 220 2500 // USA +1 855 958 2502 //
www.brainboxes.com // sales@brainboxes.com

US-735 USB-C to 1 Port RS232 Industrial USB to Serial Adaptor

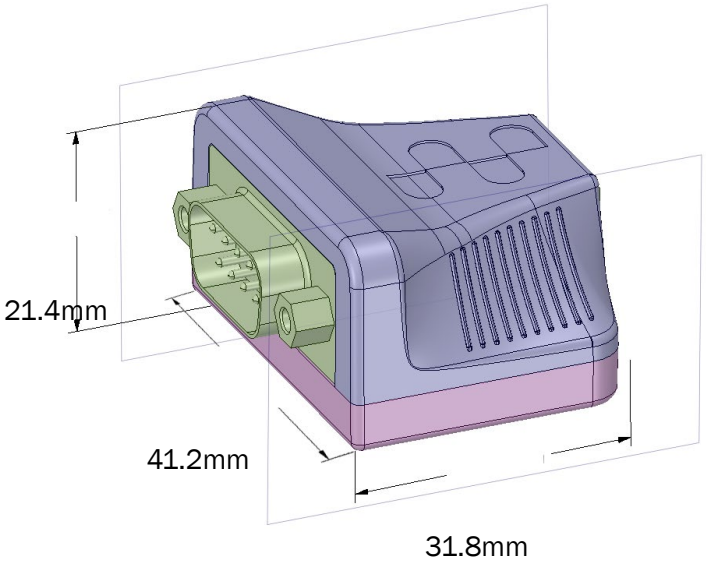

RS232

Pin 1	DCD
Pin 2	RXD
Pin 3	TXD
Pin 4	DTR
Pin 5	GND
Pin 6	DSR
Pin 7	RTS
Pin 8	CTS
Pin 9	RI

RS232 Pinout (9 Pin Male)

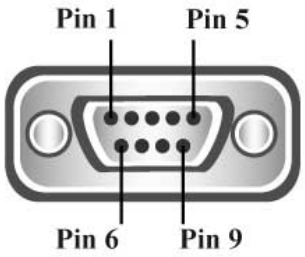

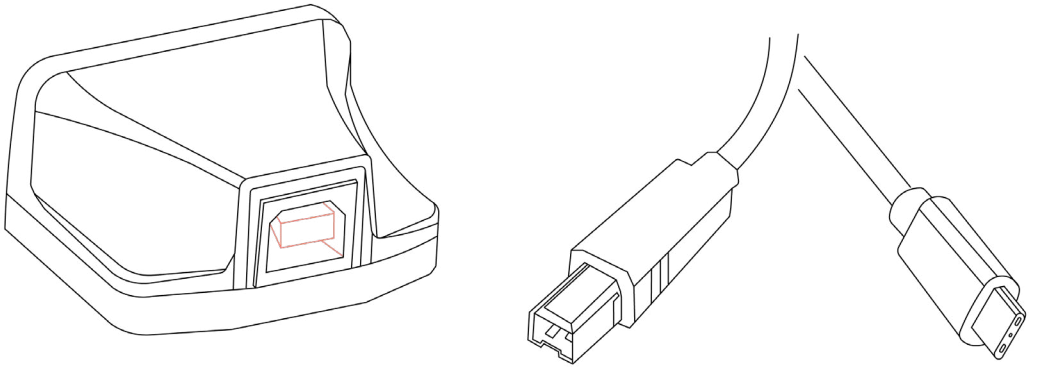

Software

OS Compatibility	Brainboxes' software provides a TCP or Serial COM port interface. All software versions and updates available to download from our website.
Microsoft	Windows 8, Windows 8.1, Windows 10 Windows Server 2016 Windows Server 2019

Windows 8 Compatible | Windows 8.1 Compatible | Windows 10 Compatible | Windows Server 2016 Certified | Windows Server 2019 Certified

Lifetime Warranty and Support:
We can help with every aspect of your project, from getting you up and running to custom application.

UK +44 (0)151 220 2500 // USA +1 855 958 2502 //
www.brainboxes.com // sales@brainboxes.com

US-735 USB-C to 1 Port RS232 Industrial USB to Serial Adaptor

Packaging Information	QSG, Device, USB-C Cable (signed drivers are automatically downloaded by Windows OS)
Product Weight	0.024 kg, 0.85 ounces
Product Dims	41x38x22 mm, 1.6x1.5x0.9 inches
Packaged Weight	0.155 kg, 5.47 ounces
Packaged Dims	160x135x45 mm, 6.3x5.3x1.8 inches
GTIN Universal Code	837324004601
Industry Approvals	Microsoft Certified Gold Partner, WEEE, RoHS, AEO (C-TPAT), CE, UKCA
HTS	8471800000
ECCN	49449A
CAGE	8QCY6
Warranty	Lifetime - online registration required
Support	Lifetime Web, Email & Phone Support from fully qualified, friendly staff who work in and alongside the Product Development Team
Standards	ISO9001, ISO14001
OEM option	Available for bulk buy OEM
COO (Country of Origin)	GB
Made In	Manufactured in GB by Brainboxes
Customisable	Brainboxes operate a 'Perfect Fit Custom Design' policy for volume users More info:sales@brainboxes.com

USB-C Range

USB-C adaptors available in a range of formats and specifications

www.brainboxes.com



US-720

USB-C to 1 Port
422/485 Industrial USB to Serial Adaptor



US-757

USB-C to 2 Port
RS232 Serial Server Hub



US-759

USB-C to 1 Port
RS232 Industrial Isolated
USB to Serial Adaptor

© Brainboxes 2021