ZED-F9P-04B

u-blox F9 high precision GNSS module

Data sheet

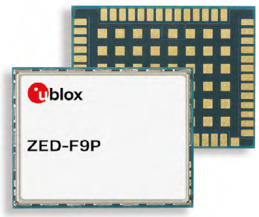

Abstract

This data sheet describes the ZED-F9P high precision module with multi-band GNSS receiver. The module provides multi-band RTK with fast convergence times, reliable performance and easy integration of RTK for fast time-to-market. It has a high update rate for highly dynamic applications and centimeter-level accuracy in a small and energy-efficient module.

www.u-blox.com

UBX-21044850 - R02
C1-Public

Document information

Title	**ZED-F9P-04B**	
Subtitle	u-blox F9 high precision GNSS module	
Document type	Data sheet	
Document number	UBX-21044850	
Revision and date	R02	03-May-2022
Disclosure restriction	C1-Public	

Product status	Corresponding content status	
In development / prototype	Objective specification	Target values. Revised and supplementary data will be published later.
Engineering sample	Advance information	Data based on early testing. Revised and supplementary data will be published later.
Initial production	Early production information	Data from product verification. Revised and supplementary data may be published later.
Mass production / End of life	Production information	Document contains the final product specification.

This document applies to the following products:

Product name	Type number	FW version	IN/PCN reference	Product status
ZED-F9P	ZED-F9P-04B-01	HPG 1.32	UBX-22010309	Initial production

u-blox or third parties may hold intellectual property rights in the products, names, logos and designs included in this document. Copying, reproduction, modification or disclosure to third parties of this document or any part thereof is only permitted with the express written permission of u-blox.

The information contained herein is provided "as is" and u-blox assumes no liability for its use. No warranty, either express or implied, is given, including but not limited to, with respect to the accuracy, correctness, reliability and fitness for a particular purpose of the information. This document may be revised by u-blox at any time without notice. For the most recent documents, visit www.u-blox.com.

Copyright © 2022, u-blox AG.

Contents

1 Functional description ... 4
1.1 Overview ... 4
1.2 Performance ... 4
1.3 Supported GNSS constellations ... 6
1.4 Supported GNSS augmentation systems ... 7
1.4.1 Quasi-Zenith Satellite System (QZSS) ... 7
1.4.2 Satellite based augmentation system (SBAS) ... 7
1.4.3 Differential GNSS (DGNSS) ... 7
1.4.4 Centimeter level augmentation service (CLAS) ... 8
1.5 Broadcast navigation data and satellite signal measurements ... 9
1.5.1 Carrier-phase measurements ... 9
1.6 Supported protocols ... 9
2 System description ... 10
2.1 Block diagram ... 10
3 Pin definition ... 11
3.1 Pin assignment ... 11
3.2 Pin states ... 13
4 Electrical specification ... 14
4.1 Absolute maximum ratings ... 14
4.2 Operating conditions ... 14
4.3 Indicative power requirements ... 15
5 Communications interfaces ... 16
5.1 UART ... 16
5.2 SPI ... 16
5.3 I2C ... 17
5.4 USB ... 19
5.5 Default interface settings ... 19
6 Mechanical specification ... 20
7 Reliability tests and approvals ... 21
7.1 Approvals ... 21
8 Labeling and ordering information ... 22
8.1 Product labeling ... 22
8.2 Explanation of product codes ... 22
8.3 Ordering codes ... 22
Related documents ... 23
Revision history ... 24

1 Functional description

1.1 Overview

The ZED-F9P-04B positioning module features the u-blox F9 receiver platform, which provides multi-band GNSS to high-volume industrial applications. The ZED-F9P-04B has integrated u-blox multi-band RTK and PPP-RTK[1] technologies for centimeter-level accuracy. The module enables precise navigation and automation of moving machinery in industrial and consumer-grade products in a compact surface-mounted form factor of only 17.0 x 22.0 x 2.4 mm.

The ZED-F9P-04B includes moving base support, allowing both base and rover to move while computing the position between them. The moving base is ideal for UAV applications where the UAV is programmed to follow its owner or to land on a moving platform. It is also well suited to attitude sensing applications where both base and rover modules are mounted on the same moving platform and the relative position is used to derive attitude information for the vehicle or tool.

In this document, RTK refers to an OSR-based solution (using RTCM corrections), while PPP-RTK refers to an SSR-based solution (using SPARTN or CLAS corrections).

1.2 Performance

Parameter	Specification	
Receiver type	Multi-band GNSS high precision receiver	
Accuracy of time pulse signal	RMS 99%	30 ns 60 ns
Frequency of time pulse signal		0.25 Hz to 10 MHz (configurable)
Operational limits[2]	Dynamics Altitude Velocity	≤ 4 g 80,000 m 500 m/s
Velocity accuracy[3]		0.05 m/s
Dynamic heading accuracy[3]		0.3 deg

GNSS[4]		GPS+GLO+GAL+BDS	GPS+GLO+GAL	GPS+GAL	GPS+GLO	GPS+BDS	GPS
Acquisition[5]	Cold start	25 s	25 s	30 s	25 s	30 s	30 s
	Hot start	2 s	2 s	2 s	2 s	2 s	2 s
	Aided start[6]	2 s	2 s	2 s	2 s	2 s	2 s
Nav. update rate[7]	RTK	7 Hz	10 Hz	15 Hz	14 Hz	13 Hz	20 Hz
	PVT	9 Hz	10 Hz	20 Hz	20 Hz	16 Hz	25 Hz
	RAW	15 Hz	18 Hz	25 Hz	25 Hz	25 Hz	25 Hz

1 PPP-RTK position accuracy depends on the quality of the SSR service used, high-quality SSR services can perform similarly to RTK
2 Assuming Airborne 4 g platform
3 50% at 30 m/s for dynamic operation
4 GPS used in combination with QZSS and SBAS
5 Commanded starts. All satellites at -130 dBm. Measured at room temperature.
6 Dependent on the speed and latency of the aiding data connection, commanded starts
7 Measured with primary output only, secondary output disabled (default)

GNSS[4]		GPS+GLO+GAL+BDS	GPS+GLO+GAL	GPS+GAL	GPS+GLO	GPS+BDS	GPS
Convergence time[8]	RTK	< 10 s	< 10 s	< 10 s	< 10 s	< 10 s	< 30 s

Table 1: ZED-F9P-04B performance in different GNSS modes

GNSS		GPS+GLO+GAL+BDS	GPS+GLO+GAL	GPS+GAL	GPS+GLO	GPS+BDS	GPS
Horizontal pos. accuracy	PVT[9]	1.5 m CEP	1.5 m CEP	1.5 m CEP	1.5 m CEP	1.5 m CEP	1.5 m CEP
	SBAS[9]	1.0 m CEP	1.0 m CEP	1.0 m CEP	1.0 m CEP	1.0 m CEP	1.0 m CEP
	RTK[10]	0.01 m + 1 ppm CEP	0.01 m + 1 ppm CEP	0.01 m + 1 ppm CEP	0.01 m + 1 ppm CEP	0.01 m + 1 ppm CEP	0.01 m + 1 ppm CEP
Vertical pos. accuracy	PVT[9]	2.0 m R50	2.0 m R50	2.0 m R50	2.0 m R50	2.0 m R50	2.0 m R50
	SBAS[9]	1.5 m R50	1.5 m R50	1.5 m R50	1.5 m R50	1.5 m R50	1.5 m R50
	RTK[10]	0.01 m + 1 ppm R50	0.01 m + 1 ppm R50	0.01 m + 1 ppm R50	0.01 m + 1 ppm R50	0.01 m + 1 ppm R50	0.01 m + 1 ppm R50

Table 2: ZED-F9P-04B position accuracy in different GNSS modes

GNSS[4]		GPS+GLO+GAL+BDS	GPS+GLO+GAL
Horizontal pos. accuracy	SPARTN	< 0.06 m CEP	< 0.06 m CEP
	CLAS	0.04 m CEP	0.04 m CEP
Vertical pos. accuracy	SPARTN	< 0.12 m R50	< 0.12 m R50
	CLAS	0.08 m R50	0.08 m R50
Convergence time[8]	SPARTN[11]	< 45 s	< 45 s
	CLAS	< 70 s	< 70 s

Table 3: ZED-F9P-04B performance for PPP-RTK in different GNSS modes

☞ PPP-RTK performance with SPARTN 2.0.1 protocol varies amongst service providers and service definitions. Performance has been validated with SPARTN correction stream available at the time of firmware release in April 2022.

GNSS[4]		GPS+GLO+GAL+BDS
Sensitivity[12]	Tracking and nav.	-167 dBm
	Reacquisition	-160 dBm
	Cold start	-148 dBm
	Hot start	-157 dBm

Table 4: ZED-F9P-04B sensitivity

GNSS	GPS+GLO+GAL+BDS	GPS+GLO+GAL	GPS+GAL	GPS+GLO	GPS+BDS	GPS
Nav. update rate	5 Hz	5 Hz	5 Hz	5 Hz	5 Hz	8 Hz
Heading accuracy	0.4 deg	0.4 deg	0.4 deg	0.4 deg	0.4 deg	0.4 deg

Table 5: ZED-F9P-04B moving base RTK performance in different GNSS modes

4 GPS used in combination with QZSS and SBAS

8 Depends on atmospheric conditions, baseline length, GNSS antenna, multipath conditions, satellite visibility and geometry

9 24 hours static

10 Measured using 1 km baseline and patch antennas with good ground planes. Does not account for possible antenna phase center offset errors. ppm limited to baselines up to 20 km.

11 Measured for IP data stream only with low-latency communication link

12 Demonstrated with a good external LNA. Measured at room temperature.

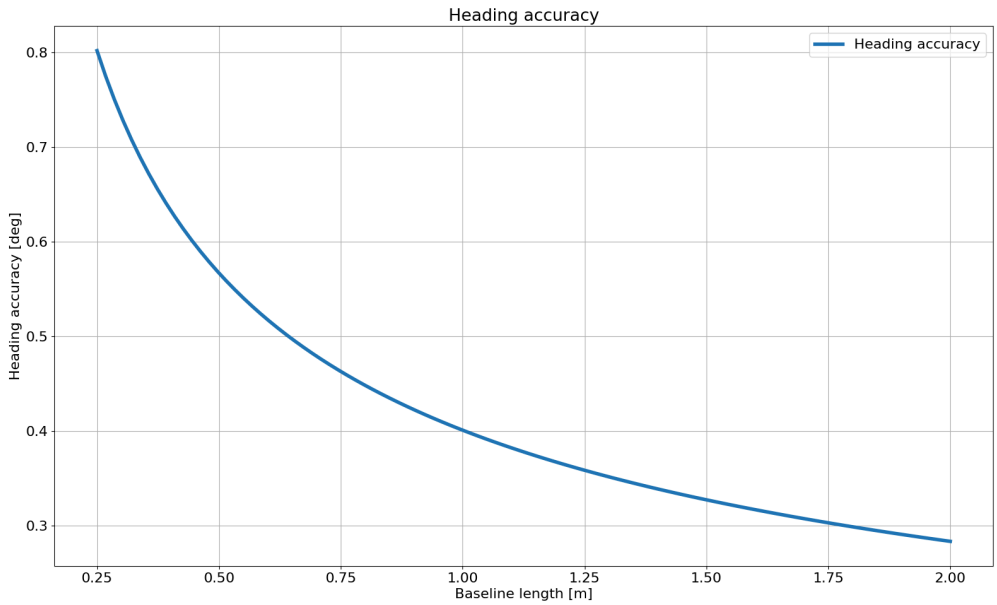

Figure 1: ZED-F9P-04B moving base RTK heading accuracy versus baseline length

☞ In a moving base application, and especially when the antennas are mounted on the same platform, it is recommended to use identical antennas. Furthermore it is recommended these antennas are mounted with identical orientation, as this will minimize effects of phase center variation.

1.3 Supported GNSS constellations

The ZED-F9P-04B GNSS modules are concurrent GNSS receivers that can receive and track multiple GNSS constellations. Owing to the multi-band RF front-end architecture, all four major GNSS constellations (GPS, GLONASS, Galileo and BeiDou) plus SBAS and QZSS satellites can be received concurrently. All satellites in view can be processed to provide an RTK navigation solution when used with correction data. If power consumption is a key factor, the receiver can be configured for a subset of GNSS constellations.

The QZSS system shares the same frequency bands as GPS and can only be processed in conjunction with GPS.

To benefit from multi-band signal reception, dedicated hardware preparation must be made during the design-in phase. See the integration manual [1] for u-blox design recommendations.

The ZED-F9P-04B supports the GNSS and their signals as shown in Table 6.

GPS / QZSS	GLONASS	Galileo	BeiDou	NavIC
L1C/A (1575.420 MHz)	L1OF (1602 MHz + k*562.5 kHz, k = –7,..,6)	E1-B/C (1575.420 MHz)	B1I (1561.098 MHz)	-
L2C (1227.600 MHz)	L2OF (1246 MHz + k*437.5 kHz, k = –7,..,6)	E5b (1207.140 MHz)	B2I (1207.140 MHz)	-

Table 6: Supported GNSS and signals on ZED-F9P-04B

The ZED-F9P-04B can use the u-blox AssistNow™ Online service which provides GNSS assistance information.

1.4 Supported GNSS augmentation systems

1.4.1 Quasi-Zenith Satellite System (QZSS)

The Quasi-Zenith Satellite System (QZSS) is a regional navigation satellite system that provides positioning services for the Pacific region covering Japan and Australia. The ZED-F9P-04B is able to receive and track QZSS L1 C/A and L2C signals concurrently with GPS signals, resulting in better availability especially under challenging signal conditions, e.g., in urban canyons.

The ZED-F9P-04B is also able to receive the QZSS L1S signal in order to use the SLAS (Sub-meter Level Augmentation Service) which is an augmentation technology that provides correction data for pseudoranges. Ground monitoring stations positioned in Japan calculate separate corrections for each visible satellite and broadcast this data to the user via QZSS satellites. The correction stream is transmitted on the L1 frequency (1575.42 MHz).

☞ QZSS can be enabled only if GPS operation is also configured.

1.4.2 Satellite based augmentation system (SBAS)

The ZED-F9P-04B supports SBAS (including WAAS in the US, EGNOS in Europe, MSAS in Japan and GAGAN in India) to deliver improved location accuracy within the regions covered. However, the additional inter-standard time calibration step used during SBAS reception results in degraded time accuracy overall.

1.4.3 Differential GNSS (DGNSS)

When operating in RTK mode, RTCM version 3 messages are required and the module supports DGNSS according to RTCM 10403.3.

A ZED-F9P-04B operating as a rover can decode the following RTCM 3.3 messages:

Message type	Description
RTCM 1001	L1-only GPS RTK observables
RTCM 1002	Extended L1-only GPS RTK observables
RTCM 1003	L1/L2 GPS RTK observables
RTCM 1004	Extended L1/L2 GPS RTK observables
RTCM 1005	Stationary RTK reference station ARP
RTCM 1006	Stationary RTK reference station ARP with antenna height
RTCM 1007	Antenna descriptor
RTCM 1009	L1-only GLONASS RTK observables
RTCM 1010	Extended L1-only GLONASS RTK observables
RTCM 1011	L1/L2 GLONASS RTK observables
RTCM 1012	Extended L1/L2 GLONASS RTK observables
RTCM 1033	Receiver and antenna description
RTCM 1074	GPS MSM4
RTCM 1075	GPS MSM5
RTCM 1077	GPS MSM7
RTCM 1084	GLONASS MSM4
RTCM 1085	GLONASS MSM5
RTCM 1087	GLONASS MSM7
RTCM 1094	Galileo MSM4

Message type	Description
RTCM 1095	Galileo MSM5
RTCM 1097	Galileo MSM7
RTCM 1124	BeiDou MSM4
RTCM 1125	BeiDou MSM5
RTCM 1127	BeiDou MSM7
RTCM 1230	GLONASS code-phase biases
RTCM 4072.0	Reference station PVT (u-blox proprietary RTCM Message)

Table 7: Supported input RTCM 3.3 messages

A ZED-F9P-04B operating as a base station can generate the following RTCM 3.3 output messages:

Message type	Description
RTCM 1005	Stationary RTK reference station ARP
RTCM 1074	GPS MSM4
RTCM 1077	GPS MSM7
RTCM 1084	GLONASS MSM4
RTCM 1087	GLONASS MSM7
RTCM 1094	Galileo MSM4
RTCM 1097	Galileo MSM7
RTCM 1124	BeiDou MSM4
RTCM 1127	BeiDou MSM7
RTCM 1230	GLONASS code-phase biases
RTCM 4072.0	Reference station PVT (u-blox proprietary RTCM Message)
RTCM 4072.1	Additional reference station information (u-blox proprietary RTCM Message)

Table 8: Supported output RTCM 3.3 messages

A ZED-F9P-04B operating as a rover can decode the following SPARTN 2.0.1 messages:

Message type-subtype	Description
SM 0-0	GPS orbit, clock, bias (OCB)
SM 0-1	GLONASS orbit, clock, bias (OCB)
SM 0-2	Galileo orbit, clock, bias (OCB)
SM 1-0	GPS high-precision atmosphere correction (HPAC)
SM 1-1	GLONASS high-precision atmosphere correction (HPAC)
SM 1-2	Galileo high-precision atmosphere correction (HPAC)
SM 2-0	Geographic area definition (GAD)

Table 9: Supported input SPARTN version 2.0.1 messages

1.4.4 Centimeter level augmentation service (CLAS)

A ZED-F9P-04B operating as a rover can receive UBX-RXM-QZSSL6 message from a NEO-D9C on any communication interface. The message contains QZSS CLAS (centimeter-level augmentation service) corrections. The CLAS protocol provides corrections for in-view GPS, Galileo, and QZSS satellites in Japan.

1.5 Broadcast navigation data and satellite signal measurements

The ZED-F9P-04B can output all the GNSS broadcast data upon reception from tracked satellites. This includes all the supported GNSS signals plus the augmentation services QZSS and SBAS. The UBX-RXM-SFRBX message is used for this information. The receiver also makes available the tracked satellite signal information, i.e. raw code phase and Doppler measurements, in a form aligned to the Radio Resource LCS Protocol (RRLP) [3]. For the UBX-RXM-SFRBX message specification, see the interface description [2].

1.5.1 Carrier-phase measurements

The ZED-F9P-04B modules provide raw carrier-phase data for all supported signals, along with pseudorange, Doppler and measurement quality information. The data contained in the UBX-RXM-RAWX message follows the conventions of a multi-GNSS RINEX 3 observation file. For the UBX-RXM-RAWX message specification, see interface description [2].

☞ Raw measurement data are available once the receiver has established data bit synchronization and time-of-week.

1.6 Supported protocols

The ZED-F9P-04B supports the following protocols:

Protocol	Type
UBX	Input/output, binary, u-blox proprietary
NMEA 4.11 (default), 4.10, 4.0, 2.3, and 2.1	Input/output, ASCII
RTCM 3.3	Input/output, binary
SPARTN 2.0.1	Input, binary

Table 10: Supported protocols

For specification of the protocols, see the interface description [2].

2 System description

2.1 Block diagram

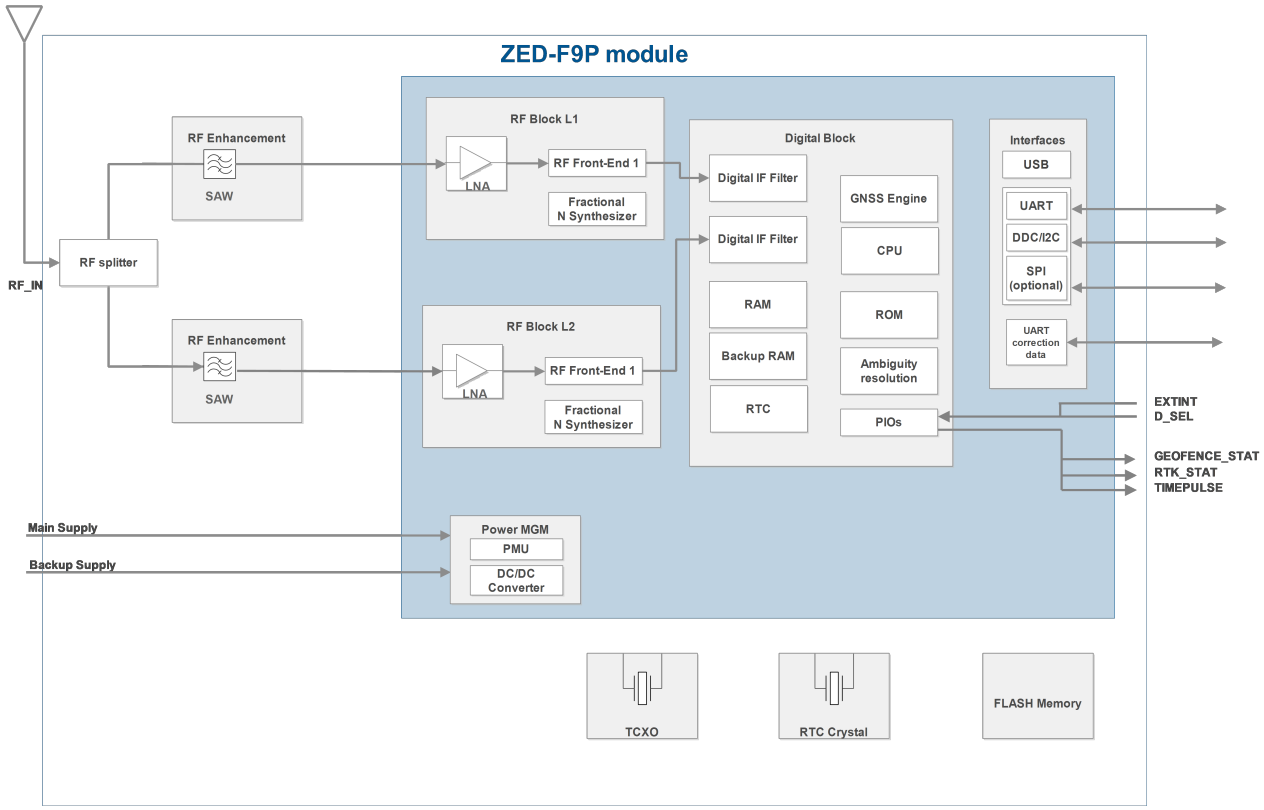

Figure 2: ZED-F9P-04B block diagram

☞ An active antenna is mandatory with the ZED-F9P-04B. See the integration manual [1].

3 Pin definition

3.1 Pin assignment

The pin assignment of the ZED-F9P-04B module is shown in Figure 3. The defined configuration of the PIOs is listed in Table 11.

For detailed information on pin functions and characteristics, see the Integration manual [1].

☞ The ZED-F9P-04B is an LGA package with the I/O on the outside edge and central ground pads.

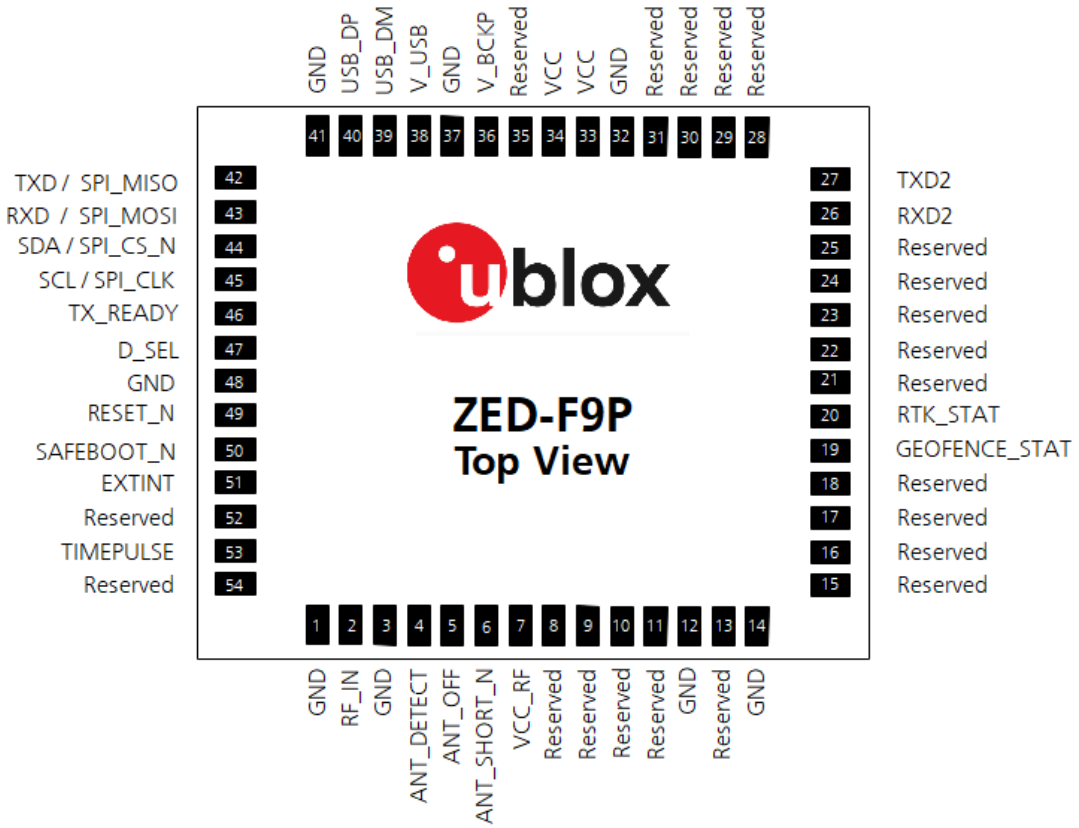

Figure 3: ZED-F9P-04B pin assignment

Pin no.	Name	I/O	Description
1	GND	-	Ground
2	RF_IN	I	RF input
3	GND	-	Ground
4	ANT_DETECT	I	Active antenna detect - default active high
5	ANT_OFF	O	External LNA disable - default active high
6	ANT_SHORT_N	I	Active antenna short detect - default active low
7	VCC_RF	O	Voltage for external LNA
8	Reserved	-	Reserved
9	Reserved	-	Reserved

Pin no.	Name	I/O	Description
10	Reserved	-	Reserved
11	Reserved	-	Reserved
12	GND	-	Ground
13	Reserved	-	Reserved
14	GND	-	Ground
15	Reserved	-	Reserved
16	Reserved	-	Reserved
17	Reserved	-	Reserved
18	Reserved	-	Reserved
19	GEOFENCE_STAT	O	Geofence status, user defined
20	RTK_STAT	O	RTK status: 0 = RTK/PPP-RTK fixed blinking = receiving and using corrections 1 = no corrections
21	Reserved	-	Reserved
22	Reserved	-	Reserved
23	Reserved	-	Reserved
24	Reserved	-	Reserved
25	Reserved	-	Reserved
26	RXD2	I	Correction UART input
27	TXD2	O	Correction UART output
28	Reserved	-	Reserved
29	Reserved	-	Reserved
30	Reserved	-	Reserved
31	Reserved	-	Reserved
32	GND	-	Ground
33	VCC	I	Voltage supply
34	VCC	I	Voltage supply
35	Reserved	-	Reserved
36	V_BCKP	I	Backup supply voltage
37	GND	-	Ground
38	V_USB	I	USB supply
39	USB_DM	I/O	USB data
40	USB_DP	I/O	USB data
41	GND	-	Ground
42	TXD / SPI_MISO	O	Host UART output if D_SEL = 1(or open). SPI_MISO if D_SEL = 0
43	RXD / SPI_MOSI	I	Host UART input if D_SEL = 1(or open). SPI_MOSI if D_SEL = 0
44	SDA / SPI_CS_N	I/O	I2C Data if D_SEL = 1 (or open). SPI Chip Select if D_SEL = 0
45	SCL / SPI_CLK	I/O	I2C Clock if D_SEL = 1(or open). SPI Clock if D_SEL = 0
46	TX_READY	O	TX_Buffer full and ready for TX of data
47	D_SEL	I	Interface select for pins 42-45
48	GND	-	Ground
49	RESET_N	I	RESET_N
50	SAFEBOOT_N	I	SAFEBOOT_N (for future service, updates and reconfiguration, leave OPEN)

Pin no.	Name	I/O	Description
51	EXTINT	I	External interrupt pin
52	Reserved	-	Reserved
53	TIMEPULSE	O	Time pulse
54	Reserved	-	Reserved

Table 11: ZED-F9P-04B pin assignment

3.2 Pin states

Table 12 defines the state of some ZED-F9P-04B pins in different modes. The functions for the ZED-F9P-04B pins are as defined in the default configuration.

Pin no.	Default function	Continuous mode	Software backup mode	Safeboot mode
47	D_SEL = open	Input pull-up	Input pull-up	Input pull-up
	D_SEL = GND	High Z	Input pull-down	High Z
43	RXD	Input pull-up	Input pull-up	Input pull-up
	SPI_MOSI	High Z	Input pull-up	Input pull-up
42	TXD	Output	Input pull-up	Output
	SPI_MISO	Output[13]	Input pull-up	Output[13]
44	SDA	Input pull-up / Output	Input pull-up	Input pull-up / Output
	SPI_CS_N	High Z	High Z	High Z
34	SCL	Input pull-up	Input pull-up	Input pull-up
	SPI_CLK	High Z	High Z	High Z
53	TIMEPULSE	Output	Input pull-up	Output low
50	SAFEBOOT_N	Input pull-up	Input pull-up	Input pull-up
51	EXTINT	Input pull-up	Input pull-up	Input pull-up
26	RXD2	Input pull-up	Input pull-up	Input pull-up
27	TXD2	Output	Input pull-up	Output
49	RESET_N	Input pull-up	Input pull-up	Input pull-up

Table 12: ZED-F9P-04B pin states in different operational modes

[13] If SPI CS = low. Otherwise it is configured as an input pull-up.

4 Electrical specification

☞ The limiting values given are in accordance with the Absolute Maximum Rating System (IEC 134). Stress above one or more of the limiting values may cause permanent damage to the device. These are stress ratings only. Operation of the device at these or at any other conditions above those given below is not implied. Exposure to limiting values for extended periods may affect device reliability.

☞ Where application information is given, it is advisory only and does not form part of the specification.

4.1 Absolute maximum ratings

Parameter	Symbol	Condition	Min	Max	Units
Power supply voltage	VCC		-0.5	3.6	V
Voltage ramp on VCC[14]			20	8000	µs/V
Backup battery voltage	V_BCKP		-0.5	3.6	V
Voltage ramp on V_BCKP[14]			20		µs/V
Input pin voltage	Vin	VCC ≤ 3.1 V	-0.5	VCC + 0.5	V
		VCC > 3.1 V	-0.5	3.6	V
VCC_RF output current	ICC_RF			100	mA
Supply voltage USB	V_USB		–0.5	3.6	V
USB signals	USB_DM, USB_DP		-0.5	V_USB + 0.5	V
Input power at RF_IN	Prfin	source impedance = 50 Ω, continuous wave		10	dBm
Storage temperature	Tstg		-40	+85	°C

Table 13: Absolute maximum ratings

⚠ The product is not protected against overvoltage or reversed voltages. Voltage spikes exceeding the power supply voltage specification, given in the table above, must be limited to values within the specified boundaries by using appropriate protection diodes.

4.2 Operating conditions

☞ All specifications are at an ambient temperature of 25 °C. Extreme operating temperatures can significantly impact the specification values. Applications operating near the temperature limits should be tested to ensure the specification.

Parameter	Symbol	Min	Typical	Max	Units	Condition
Power supply voltage	VCC	2.7	3.0	3.6	V	
Backup battery voltage	V_BCKP	1.65		3.6	V	
Backup battery current	I_BCKP		36		µA	V_BCKP = 3 V, VCC = 0 V
SW backup current	I_SWBCKP		1.4		mA	
Input pin voltage range	Vin	0		VCC	V	
Digital IO pin low level input voltage	Vil			0.4	V	
Digital IO pin high level input voltage	Vih	0.8 * VCC			V	
Digital IO pin low level output voltage	Vol			0.4	V	Iol = 2 mA

[14] Exceeding the ramp speed may permanently damage the device

Parameter	Symbol	Min	Typical	Max	Units	Condition
Digital IO pin high level output voltage	Voh	VCC – 0.4			V	Ioh = 2 mA
DC current through any digital I/O pin (except supplies)	Ipin			5	mA	
Pull-up resistance for SCL, SDA	R_{pu}	7	15	30	kΩ	
Pull-up resistance for D_SEL, RXD, TXD, SAFEBOOT_N, EXTINT	R_{pu}	30	75	130	kΩ	
Pull-up resistance for RESET_N	R_{pu}	7	10	13	kΩ	
Voltage at USB pins	V_USBIO	0		V_USB	V	
VCC_RF voltage	VCC_RF		VCC - 0.1		V	
VCC_RF output current	ICC_RF			50	mA	
Receiver chain noise figure[15]	NFtot		9.5		dB	
External gain (at RF_IN)	Ext_gain	17		50	dB	
Operating temperature	Topr	-40	+25	+85	°C	

Table 14: Operating conditions

☞ Operation beyond the specified operating conditions can affect device reliability.

4.3 Indicative power requirements

Table 15 lists examples of the total system supply current including RF and baseband section for a possible application.

☞ Values in Table 15 are provided for customer information only, as an example of typical current requirements. The values are characterized on samples by using a cold start command. Actual power requirements can vary depending on FW version used, external circuitry, number of satellites tracked, signal strength, type and time of start, duration, and conditions of test.

Symbol	Parameter	Conditions	GPS+GLO +GAL+BDS	GPS	Unit
I_{PEAK}	Peak current	Acquisition	130	120	mA
I_{VCC}[16]	VCC current	Acquisition	90	75	mA
I_{VCC}[16]	VCC current	Tracking	85	68	mA

Table 15: Currents to calculate the indicative power requirements

All values in Table 15 are measured at 25 °C ambient temperature.

15 Only valid for GPS

16 Simulated GNSS signal

5 Communications interfaces

There are several communications interfaces, including UART, SPI, I2C[17] and USB.

All the inputs have internal pull-up resistors in normal operation and can be left open if not used. All the PIOs are supplied by VCC, therefore all the voltage levels of the PIO pins are related to VCC supply voltage.

5.1 UART

The UART interfaces support configurable baud rates. See the Integration manual [1].

Hardware flow control is not supported.

The UART1 is enabled if D_SEL pin of the module is left open or "high".

Symbol	Parameter	Min	Max	Unit
R_u	Baud rate	9600	921600	bit/s
Δ_{Tx}	Tx baud rate accuracy	-1%	+1%	-
Δ_{Rx}	Rx baud rate tolerance	-2.5%	+2.5%	-

Table 16: ZED-F9P-04B UART specifications

5.2 SPI

The ZED-F9P-04B has an SPI slave interface that can be selected by setting D_SEL = 0. The SPI slave interface is shared with UART1 and I2C pins. The SPI pins available are:

- SPI_MISO (TXD)
- SPI_MOSI (RXD)
- SPI_CS_N
- SPI_CLK

The SPI interface is designed to allow communication to a host CPU. The interface can be operated in slave mode only. Note that SPI is not available in the default configuration because its pins are shared with the UART and I2C interfaces. The maximum transfer rate using SPI is 125 kB/s and the maximum SPI clock frequency is 5.5 MHz.

This section provides SPI timing values for the ZED-F9P-04B slave operation. The following tables present timing values under different capacitive loading conditions. Default SPI configuration is CPOL = 0 and CPHA = 0.

[17] I2C is a registered trademark of Philips/NXP

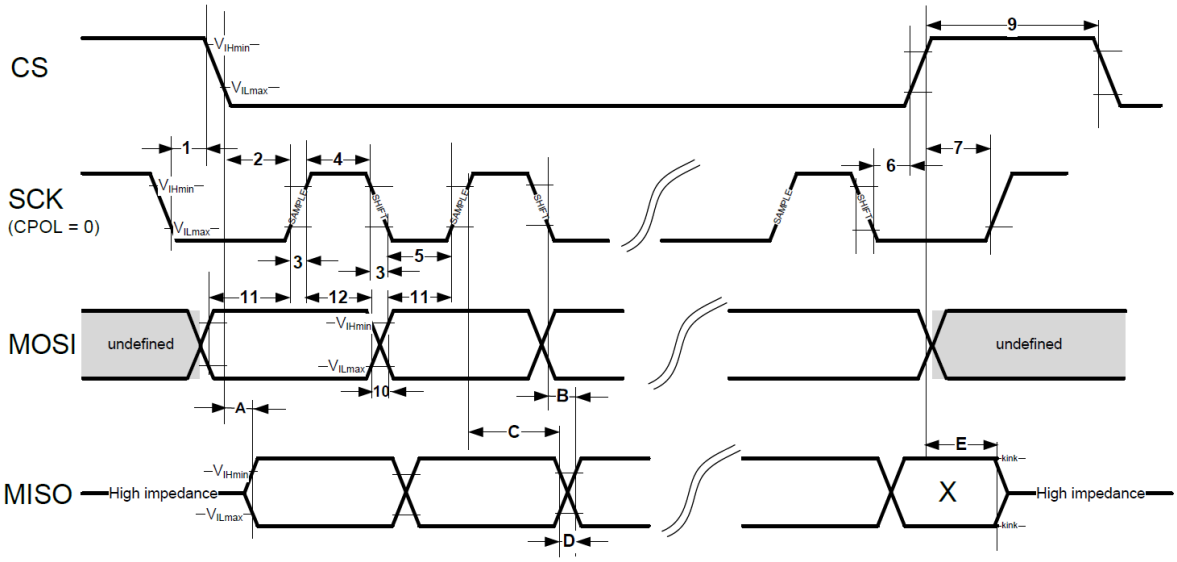

Figure 4: ZED-F9P-04B SPI specification mode 1: CPHA=0 SCK = 5.33 MHz

Timings 1 - 12 are not specified here as they are dependent on the SPI master. Timings A - E are specified for SPI slave.

Timing value at 2 pF load	Min (ns)	Max (ns)
"A" - MISO data valid time (CS)	14	38
"B" - MISO data valid time (SCK) weak driver mode	21	38
"C" - MISO data hold time	114	130
"D" - MISO rise/fall time, weak driver mode	1	4
"E" - MISO data disable lag time	20	32

Table 17: ZED-F9P-04B SPI timings at 2 pF load

Timing value at 20 pF load	Min (ns)	Max (ns)
"A" - MISO data valid time (CS)	19	52
"B" - MISO data valid time (SCK) weak driver mode	25	51
"C" - MISO data hold time	117	137
"D" - MISO rise/fall time, weak driver mode	6	16
"E" - MISO data disable lag time	20	32

Table 18: ZED-F9P-04B SPI timings at 20 pF load

Timing value at 60 pF load	Min (ns)	Max (ns)
"A" - MISO data valid time (CS)	29	79
"B" - MISO data valid time (SCK) weak driver mode	35	78
"C" - MISO data hold time	122	152
"D" - MISO rise/fall time, weak driver mode	15	41
"E" - MISO data disable lag time	20	32

Table 19: ZED-F9P-04B SPI timings at 60 pF load

5.3 I2C

An I2C-compliant interface is available for communication with an external host CPU. The interface can be operated in slave mode only. It is compatible with Fast-mode of the I2C industry standard.

Since the maximum SCL clock frequency is 400 kHz, the maximum bit rate is 400 kbit/s. The interface stretches the clock when slowed down while serving interrupts, therefore the real bit rates may be slightly lower. The maximum clock stretching time that the host can expect is 20 ms.

☞ The I2C interface is only available with the UART default mode. If the SPI interface is selected by using D_SEL = 0, the I2C interface is not available.

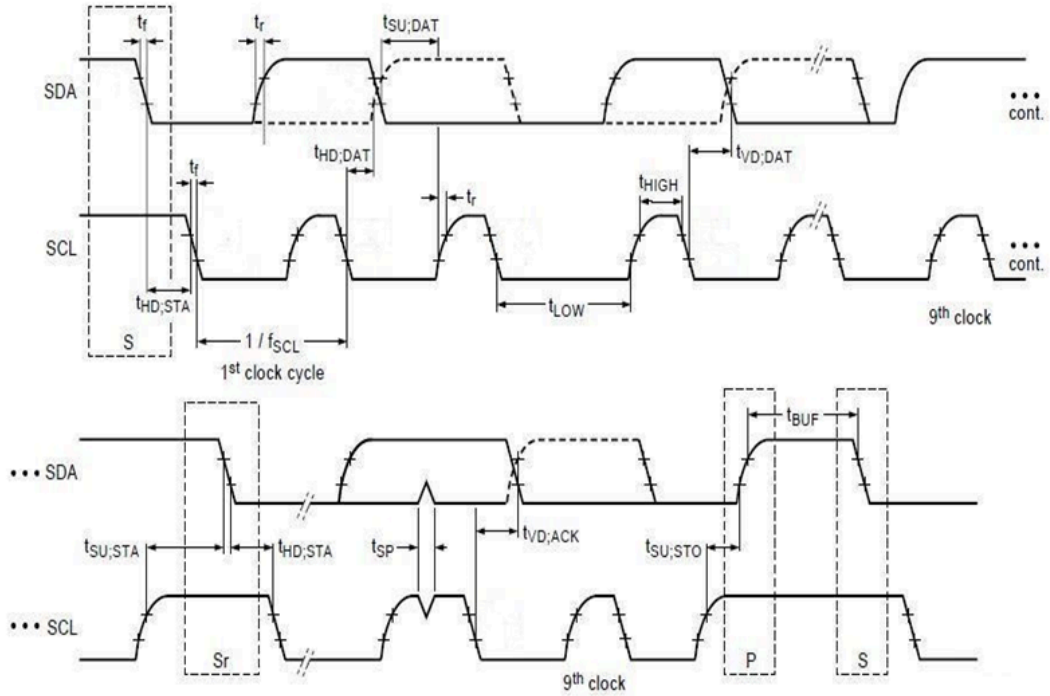

Figure 5: ZED-F9P-04B I2C slave specification

Symbol	Parameter	Min (Standard / Fast-mode)	Max	Unit
f_{SCL}	SCL clock frequency	0	400	kHz
$t_{HD;STA}$	Hold time (repeated) START condition	4.0/1	-	µs
t_{LOW}	Low period of the SCL clock	5/2	-	µs
t_{HIGH}	High period of the SCL clock	4.0/1	-	µs
$t_{SU;STA}$	Setup time for a repeated START condition	5/1	-	µs
$t_{HD;DAT}$	Data hold time	0/0	-	µs
$t_{SU;DAT}$	Data setup time	250/100		ns
t_r	Rise time of both SDA and SCL signals	-	1000/300 (for C = 400pF)	ns
t_f	Fall time of both SDA and SCL signals	-	300/300 (for C = 400pF)	ns
$t_{SU;STO}$	Setup time for STOP condition	4.0/1	-	µs
t_{BUF}	Bus-free time between a STOP and START condition	5/2	-	µs
$t_{VD;DAT}$	Data valid time	-	4/1	µs
$t_{VD;ACK}$	Data valid acknowledge time	-	4/1	µs
V_{nL}	Noise margin at the low level	0.1 VCC	-	V
V_{nH}	Noise margin at the high level	0.2 VCC	-	V

Table 20: ZED-F9P-04B I2C slave timings and specifications

5.4 USB

The USB 2.0 FS (full speed, 12 Mbit/s) interface can be used for host communication. Due to the hardware implementation, it may not be possible to certify the USB interface. The V_USB pin supplies the USB interface.

5.5 Default interface settings

Interface	Settings
UART1 output	38400 baud, 8 bits, no parity bit, 1 stop bit. NMEA protocol with **GGA, GLL, GSA, GSV, RMC, VTG, TXT** messages are output by default. UBX and RTCM 3.3 protocols are enabled by default but no output messages are enabled by default.
UART1 input	38400 baud, 8 bits, no parity bit, 1 stop bit. UBX, NMEA and RTCM 3.3 input protocols are enabled by default. SPARTN input protocol is enabled by default.
UART2 output	38400 baud, 8 bits, no parity bit, 1 stop bit. UBX protocol is disabled by default. RTCM 3.3 protocol is enabled by default but no output messages are enabled by default. NMEA protocol is disabled by default.
UART2 input	38400 baud, 8 bits, no parity bit, 1 stop bit. UBX protocol is enabled by default. RTCM 3.3 protocol is enabled by default. SPARTN protocol is enabled by default. NMEA protocol is disabled by default.
USB	Default messages activated as in UART1. Input/output protocols available as in UART1.
I2C	Fully compatible with the I2C[18] industry standard, available for communication with an external host CPU or u-blox cellular modules, operated in slave mode only. Default messages activated as in UART1. Input/output protocols available as in UART1. Maximum bit rate 400 kb/s.
SPI	Allow communication to a host CPU, operated in slave mode only. Default messages activated as in UART1. Input/output protocols available as in UART1. SPI is not available unless D_SEL pin is set to low (see section D_SEL interface in Integration manual [1]).

Table 21: Default interface settings

☞ Refer to the applicable interface description [2] for information about further settings.

☞ By default the ZED-F9P-04B outputs NMEA messages that include satellite data for all GNSS bands being received. This results in a high NMEA output load for each navigation period. Make sure the UART baud rate used is sufficient for the selected navigation rate and the number of GNSS signals being received.

⚠ Do not use UART2 as the only one interface to the host. Not all UBX functionality is available on UART2, such as firmware upgrade, safeboot or backup modes functionalities. No start-up boot screen is sent out from UART2.

[18] I2C is a registered trademark of Philips/NXP

6 Mechanical specification

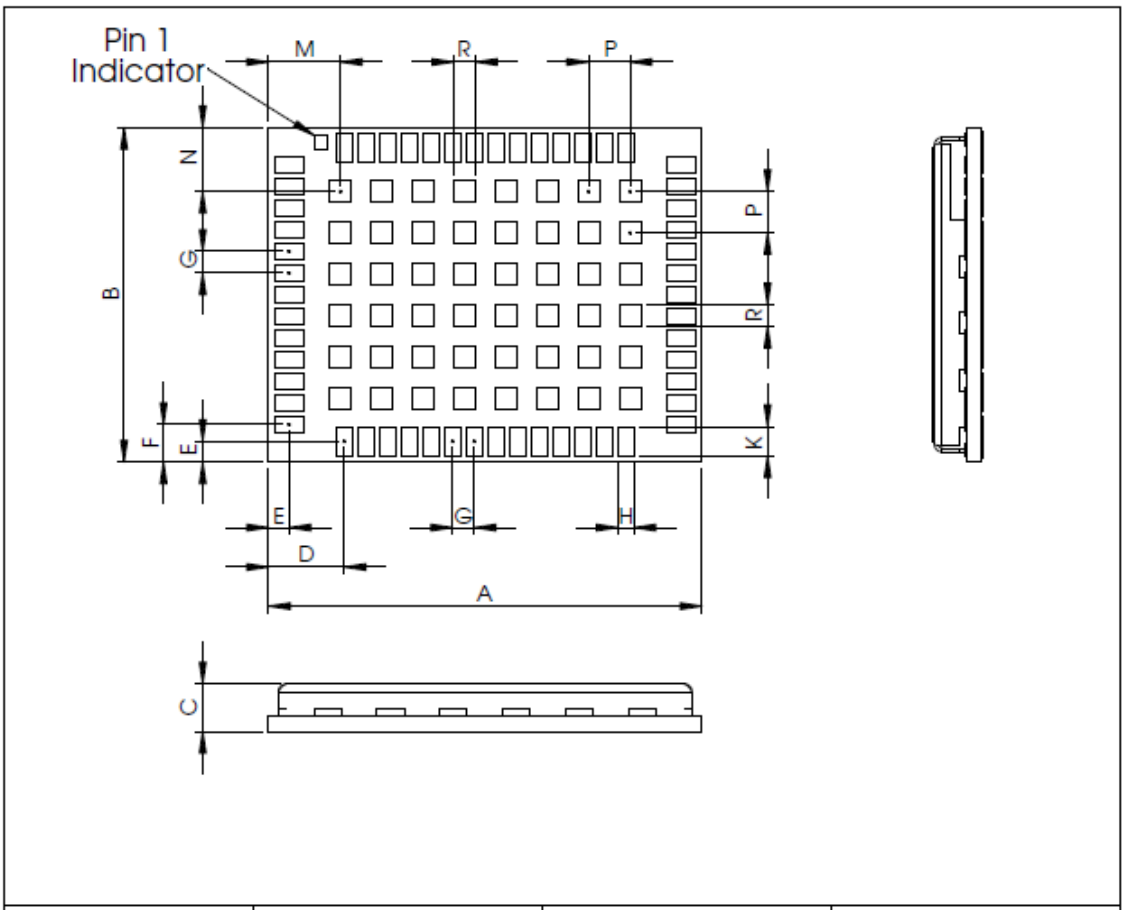

Symbol	Min. (mm)	Typ. (mm)	Max. (mm)
A	21.80	22.00	22.35
B	16.80	17.00	17.20
C	2.20	2.40	2.60
D	3.65	3.85	4.05
E	0.85	1.05	1.25
F	1.70	1.90	2.10
G	1.05	1.10	1.15
H	0.70	0.80	0.96
K	1.20	1.50	1.80
M	3.45	3.65	3.85
N	3.05	3.25	3.45
P	2.05	2.10	2.15
R	0.88	1.10	1.32
Weight		1.85g	

Figure 6: ZED-F9P-04B mechanical drawing

7 Reliability tests and approvals

ZED-F9P-04B modules are based on AEC-Q100 qualified GNSS chips.

Tests for product family qualifications are according to ISO 16750 "Road vehicles – environmental conditions and testing for electrical and electronic equipment", and appropriate standards.

7.1 Approvals

The ZED-F9P-04B is designed to in compliance with the essential requirements and other relevant provisions of Radio Equipment Directive (RED) 2014/53/EU.

The ZED-F9P-04B complies with the Directive 2011/65/EU (EU RoHS 2) and its amendment Directive (EU) 2015/863 (EU RoHS 3).

Declaration of Conformity (DoC) is available on the u-blox website.

8 Labeling and ordering information

This section provides information about product labeling and ordering. For information about moisture sensitivity level (MSL), product handling and soldering see the integration manual [1].

8.1 Product labeling

The labeling of the ZED-F9P-04B modules provides product information and revision information. For more information contact u-blox sales.

8.2 Explanation of product codes

Three product code formats are used. The **Product name** is used in documentation such as this data sheet and identifies all u-blox products, independent of packaging and quality grade. The **Ordering code** includes options and quality, while the **Type number** includes the hardware and firmware versions.

Table 22 below details these three formats.

Format	Structure	Product code
Product name	PPP-TGV	ZED-F9P
Ordering code	PPP-TGV-NNQ	ZED-F9P-04B
Type number	PPP-TGV-NNQ-XX	ZED-F9P-04B-01

Table 22: Product code formats

The parts of the product code are explained in Table 23.

Code	Meaning	Example
PPP	Product family	ZED
TG	Platform	F9 = u-blox F9
V	Variant	P = High precision
NNQ	Option / Quality grade	NN: Option [00...99] Q: Grade, A = Automotive, B = Professional
XX	Product detail	Describes hardware and firmware versions

Table 23: Part identification code

8.3 Ordering codes

Ordering code	Product	Remark
ZED-F9P-04B	ZED-F9P	Shipped with firmware FW 1.00 HPG 1.32

Table 24: Product ordering codes

☞ Product changes affecting form, fit or function are documented by u-blox. For a list of Product Change Notifications (PCNs) see our website at: https://www.u-blox.com/en/product-resources.

Related documents

[1] ZED-F9P Integration manual UBX-18010802
[2] HPG 1.32 Interface description UBX-22008968
[3] Radio Resource LCS Protocol (RRLP), (3GPP TS 44.031 version 11.0.0 Release 11)
[4] ZED-F9P Moving Base application note, UBX-19009093

☞ For regular updates to u-blox documentation and to receive product change notifications please register on our homepage https://www.u-blox.com.

Revision history

Revision	Date	Name	Status / comments
R01	21-Dec-2021	dama	Advance information
R02	03-May-2022	dama	Early production information HPG 1.32 update. ZED-F9P-04B-01 update. Overall text improvement and typo corrections plus: 1.2 Performance section updated and vertical accuracy added 3.2 Pin states on operational modes table added 4.2 Operating condition table updated with pull-up resistance values 5.5 Default interface setting table updated 8.3 Ordering code section updated Related document section updated

Contact

For complete contact information visit us at www.u-blox.com.

u-blox Offices

North, Central and South America

u-blox America, Inc.
Phone: +1 703 483 3180
E-mail: info_us@u-blox.com

Regional Office West Coast
Phone: +1 408 573 3640
E-mail: info_us@u-blox.com

Technical Support
Phone: +1 703 483 3185
E-mail: support_us@u-blox.com

Headquarters

Europe, Middle East, Africa

u-blox AG
Phone: +41 44 722 74 44
E-mail: info@u-blox.com
Support: support@u-blox.com

Asia, Australia, Pacific

u-blox Singapore Pte. Ltd.
Phone: +65 6734 3811
E-mail: info_ap@u-blox.com
Support: support_ap@u-blox.com

Regional Office Australia
Phone: +61 3 9566 7255
E-mail: info_anz@u-blox.com
Support: support_ap@u-blox.com

Regional Office China (Beijing)
Phone: +86 10 68 133 545
E-mail: info_cn@u-blox.com
Support: support_cn@u-blox.com

Regional Office China (Chongqing)
Phone: +86 23 6815 1588
E-mail: info_cn@u-blox.com
Support: support_cn@u-blox.com

Regional Office China (Shanghai)
Phone: +86 21 6090 4832
E-mail: info_cn@u-blox.com
Support: support_cn@u-blox.com

Regional Office China (Shenzhen)
Phone: +86 755 8627 1083
E-mail: info_cn@u-blox.com
Support: support_cn@u-blox.com

Regional Office India
Phone: +91 80 4050 9200
E-mail: info_in@u-blox.com
Support: support_in@u-blox.com

Regional Office Japan (Osaka)
Phone: +81 6 6941 3660
E-mail: info_jp@u-blox.com
Support: support_jp@u-blox.com

Regional Office Japan (Tokyo)
Phone: +81 3 5775 3850
E-mail: info_jp@u-blox.com
Support: support_jp@u-blox.com

Regional Office Korea
Phone: +82 2 542 0861
E-mail: info_kr@u-blox.com
Support: support_kr@u-blox.com

Regional Office Taiwan
Phone: +886 2 2657 1090
E-mail: info_tw@u-blox.com
Support: support_tw@u-blox.com