UNIT RTC

SKU:U126

Description

UNIT RTC is a programmable real-time clock module, integrated HYM8563 low-power CMOS real-time clock/calendar chip, using I2C communication interface, full-coverage case can effectively protect the circuit, making its operation more stable. Applicable to a variety of embedded devices, instruments and instruments as a system clock.

Role of RTC

Most MCUs are built-in timers, which usually start working automatically when the hardware is powered on, and reset when the hardware is powered off. The built-in timer can handle some simple timing tasks, but if we want to implement data timestamp recording, clock, alarm clock and other time-span functions, a system power-independent clock RTC is the best choice.

Product Features

- Support second/minute/hour/day/month/year. time data reading and writing
- 32.768kHz high-precision clock crystal, greatly reducing the time error
- Low power consumption, coin battery can work continuously for years
- With century mark
- I2C communication interface

Includes

- 1x Unit RTC
- 1x Coin cell battery (38mAh)
- 1x HY2.0-4P cable

Applications

- Clock, alarm clock
- Power down time synchronization

Specifications

Specifications	Parameters
Clock chip	HYM8563
Crystal Frequency	32.768kHz
Communication interface	I2C, addr: 0x51, bus max speed 400Kbps
Power supply voltage	5V DC
Net weight	4.1g
Gross Weight	8.3g
Product Dimensions	48 * 24 * 8mm
Package Size	67 * 53 * 12mm

Schematic

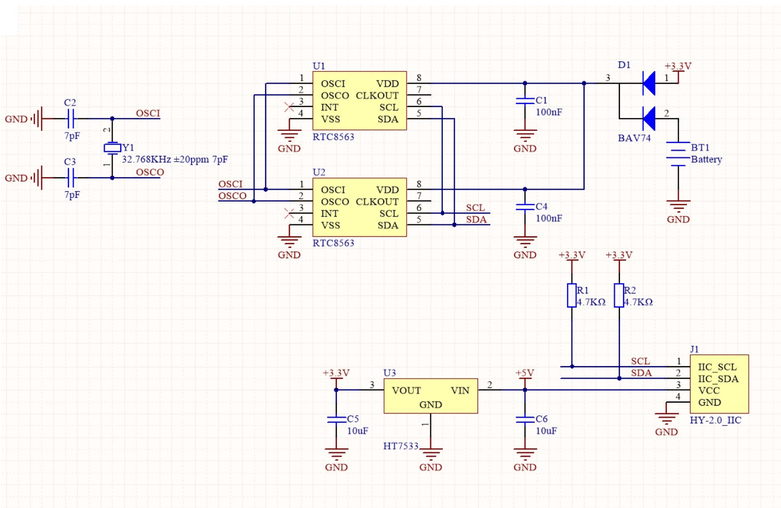

Related Links

- **Datasheet**
  - HYM8563

Example

Arduino

- M5_BM8563 Lib

Video