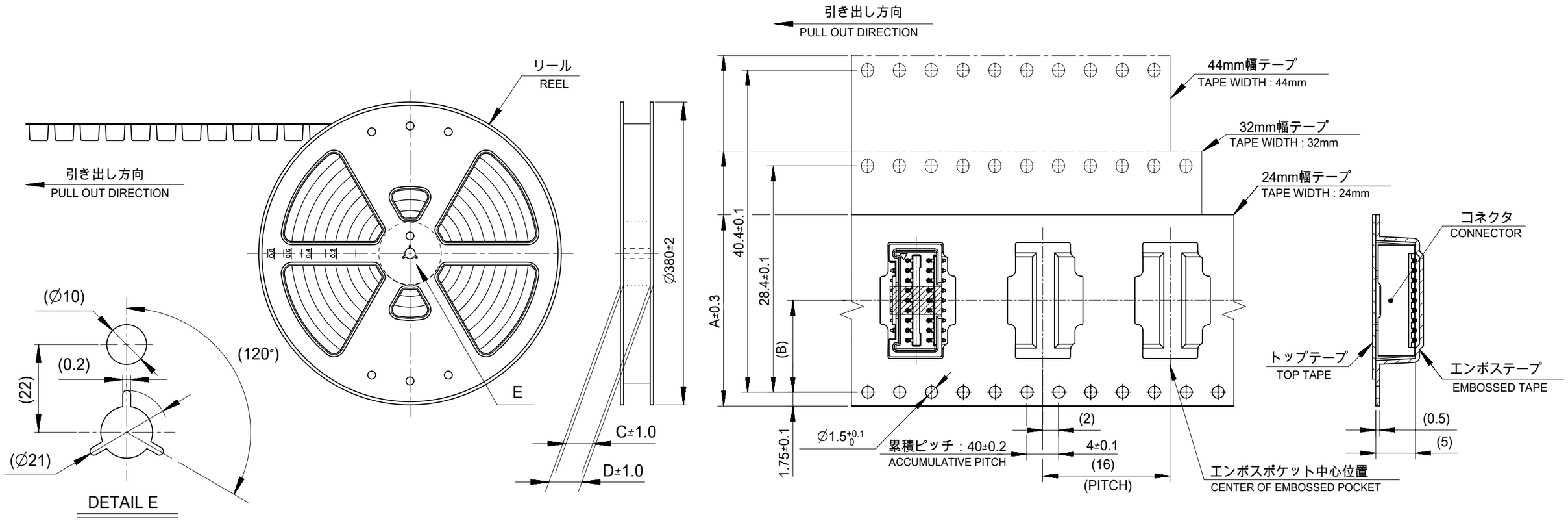

NOTES

1. 製品詳細寸法は製品単体図面を参照して下さい。
   FOR DETAIL OF CONNECTOR DIMENSIONS,
   PLEASE SEE THE DRAWING OF CONNECTOR ITSELF (NOT PACKAGED).
2. 梱包数量 ： 700個
   NUMBER OF CONNECTIORS : 700 PIECES/REEL.
3. リードテープ長さ
   LEAD TAPE LENGTH

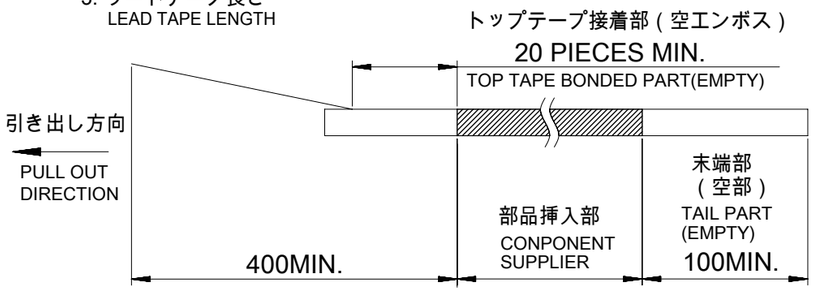

4. 材料 MATERIAL
   キャリアテープ：ポリスチレン (PS)
   CARRIER TAPE : POLYSTYRENE (PS)
   トップテープ：ポリエステル (PET)、その他
   TOP TAPE : POLYESTER (PET)、OTHER
   リール：ポリスチレン (PS) <リサイクル材を含む>
   REEL : POLYSTYRENE (PS) <RECYCLE MATERIAL CONTAINED>
5. トップテープの剥離強度については、IEC60286-3に準拠
   TOP TAPE PEEL FORCE IS DEFINED BY IEC60286-3.

D	C	B	エンボステープ幅 WIDTH OF TAPE A	HSG COLOR GREEN	HSG COLOR BLUE	HSG COLOR RED	HSG COLOR BLACK	HSG COLOR NATURAL (BEIGE)	極数 CKT. NO.
49.4	45.4	20.2	44	—/—	—/—	—/—	—/—	5041874070	40
49.4	45.4	20.2	44	—/—	—/—	—/—	—/—	5041873870	38
49.4	45.4	20.2	44	—/—	—/—	—/—	—/—	5041873670	36
49.4	45.4	20.2	44	—/—	—/—	—/—	5041873471	5041873470	34
49.4	45.4	20.2	44	—/—	—/—	—/—	—/—	5041873270	32
49.4	45.4	20.2	44	—/—	—/—	—/—	—/—	5041873070	30
37.4	33.4	14.2	32	—/—	—/—	—/—	5041872871	5041872870	28
37.4	33.4	14.2	32	—/—	—/—	—/—	—/—	5041872670	26
37.4	33.4	14.2	32	—/—	—/—	—/—	—/—	5041872470	24
37.4	33.4	14.2	32	—/—	—/—	—/—	5041872271	5041872270	22
37.4	33.4	14.2	32	—/—	—/—	5041872072	5041872071	5041872070	20
29.4	25.4	11.5	24	—/—	5041871874	—/—	5041871871	5041871870	18
29.4	25.4	11.5	24	5041871676	5041871674	5041871672	5041871671	5041871670	16
				エンボス梱包 EMBOSSED TAPE PACKAGE / オーダー番号 ORDER NO.	エンボス梱包 EMBOSSED TAPE PACKAGE / オーダー番号 ORDER NO.	エンボス梱包 EMBOSSED TAPE PACKAGE / オーダー番号 ORDER NO.	エンボス梱包 EMBOSSED TAPE PACKAGE / オーダー番号 ORDER NO.	エンボス梱包 EMBOSSED TAPE PACKAGE / オーダー番号 ORDER NO.	

GENERAL TOLERANCES (UNLESS SPECIFIED)	
10^{UNDER}	±0.2
10^{OVER} 30^{UNDER}	±0.25
30^{OVER}	±0.3

THIS DRAWING CONTAINS INFORMATION THAT IS PROPRIETARY TO MOLEX ELECTRONIC TECHNOLOGIES, LLC AND SHOULD NOT BE USED WITHOUT WRITTEN PERMISSION

DIMENSION UNITS: mm | SCALE: 2:1

GENERAL TOLERANCES (UNLESS SPECIFIED)

	MM	INCH
4 PLACES		±
3 PLACES	±	±
2 PLACES	±	±
1 PLACE	±	±
0 PLACES	±	±
ANGULAR TOL	± 1.0 °	

DRAFT WHERE APPLICABLE MUST REMAIN WITHIN DIMENSIONS

CURRENT REV DESC: OBSOLETE PART NUMBER

EC NO: 618242
DRWN: AKUMAR19 2019/03/29
CHK'D: GGA 2020/02/28
APPR: GGA 2020/02/28

INITIAL REVISION:
DRWN: SSATO02 2013/07/25
APPR: NUKITA 2013/08/08

THIRD ANGLE PROJECTION | DRAWING: A3-SIZE | SERIES: 504187

molex

EMBOSSED TAPE PKG FOR
1.25 WTB DUAL ST SMT

PRODUCT CUSTOMER DRAWING

DOCUMENT NUMBER	DOC TYPE	DOC PART	REVISION
SD-504187-001	PSD	001	A

MATERIAL NUMBER	CUSTOMER	SHEET NUMBER
SEE TABLE	GENERAL MARKET	1 OF 1

DOCUMENT STATUS	P1	RELEASE DATE	2020/02/28 02:33:18

FORMAT: Molex-letter-lb-prod-A3
REVISION: D
DATE: 2018/01/18

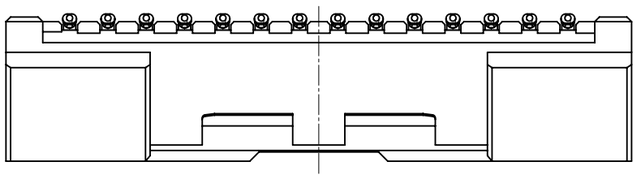

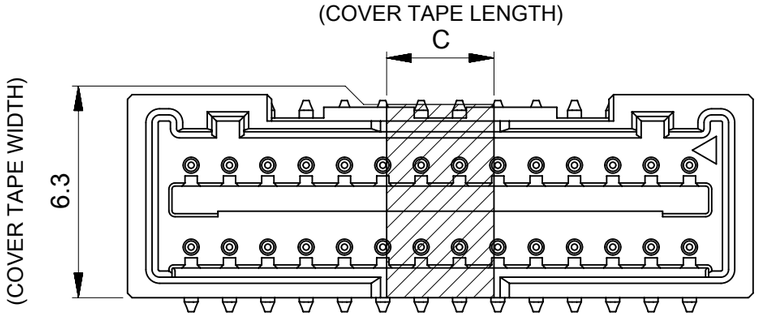

カバーテープ貼付け状態図
WITH COVER TAPE

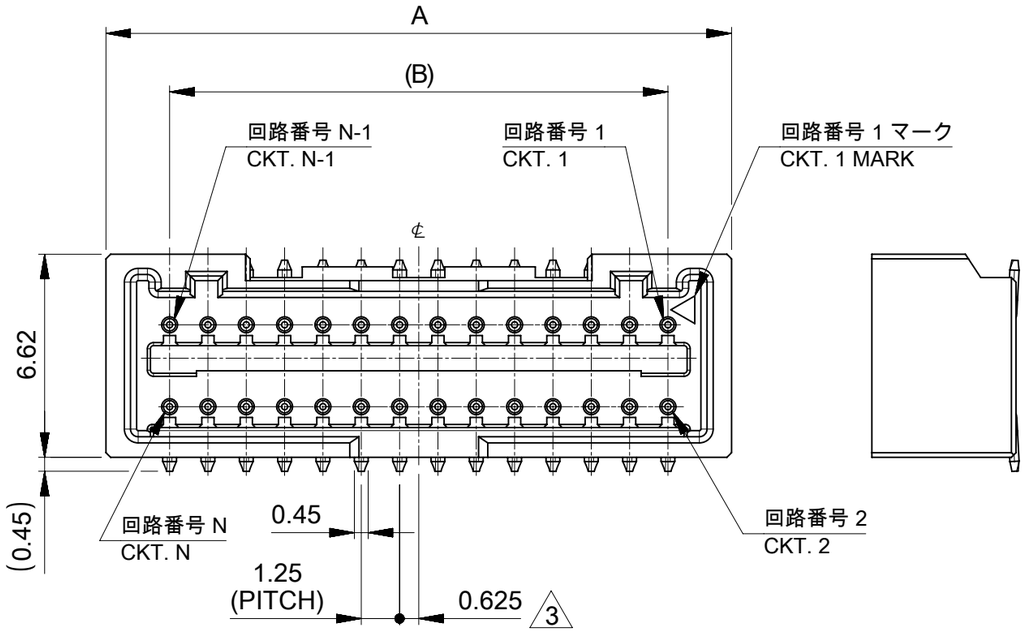

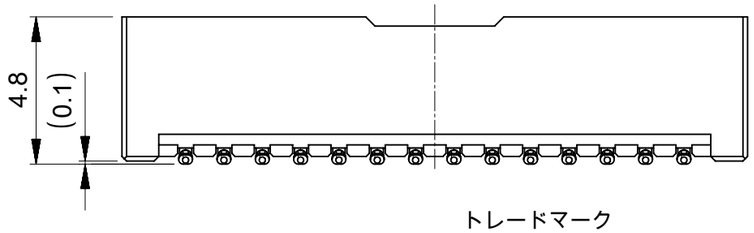

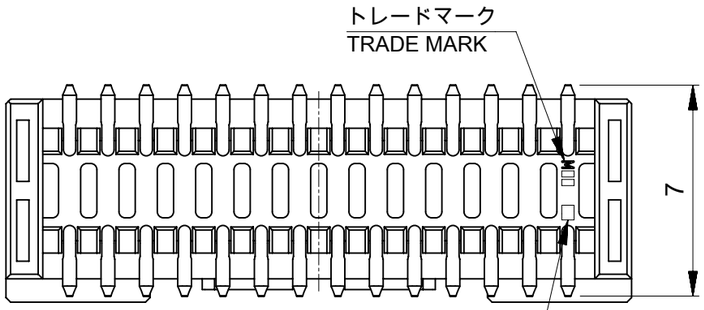

NOTES

1. 嵌合相手：504186-**0*
   MATE WITH : 504186-**0*
2. 端子テール部の平坦度：0.12MAX.
   TAIL COPLANARITY TO BE 0.12 MAX.
3. 極数 / 2 = 偶数に適用。
   APPLY FOR CKT. SIZE / 2 = EVEN.
4. 端子部に錫めっきを使用しているため、
   外観に摺動痕が付く場合が御座います。
   THE WOUND OF FRICTION MIGHT ADHERE TO EXTERNALS BECAUSE THE TIN PLATING IS USED FOR THE TERMINAL.
5. 本製品のプラスチック部に黒点等が確認される場合や
   色合いが異なる場合がありますが、製品性能に影響はありません。
   THERE IS NO INFLUENCE IN THE PRODUCT PERFORMANCE THOUGH THE BLACK SPOT ETC. MIGHT BE CONFIRMED TO THE PLASTIC PART OF THIS PRODUCT AND THE SHADE MIGHT BE DIFFERENT.
6. アプリケーション仕様書（コネクタ取扱説明書）：AS-504186-001/-002
   APPLICATION SPECIFICATIOS (CONNECTOR MANUAL): AS-504186-001/-002
7. 製品仕様書：PS-504186-001
   PRODUCT SPECIFICATION: PS-504186-001
8. 製品番号 MATERIAL No.

504187**7*
極数 CIRCUIT SIZE
色 COLOR

NO.	COLOR
0	NATURAL(BEIGE)
1	BLACK
2	RED
4	BLUE
6	GREEN

			HSG COLOR GREEN	HSG COLOR BLUE	HSG COLOR RED	HSG COLOR BLACK	HSG COLOR NATURAL (BEIGE)	
5	23.75	27.9	—/—	—/—	—/—	—/—	5041874070	40
5	22.5	26.65	—/—	—/—	—/—	—/—	5041873870	38
5	21.25	25.4	—/—	—/—	—/—	—/—	5041873670	36
5	20	24.15	—/—	—/—	—/—	5041873471	5041873470	34
5	18.75	22.9	—/—	—/—	—/—	—/—	5041873270	32
5	17.5	21.65	—/—	—/—	—/—	—/—	5041873070	30
3.5	16.25	20.4	—/—	—/—	—/—	5041872871	5041872870	28
3.5	15	19.15	—/—	—/—	—/—	—/—	5041872670	26
3.5	13.75	17.9	—/—	—/—	—/—	—/—	5041872470	24
3.5	12.5	16.65	—/—	—/—	5041872272	5041872271	5041872270	22
3.5	11.25	15.4	—/—	—/—	5041872072	5041872071	5041872070	20
3.5	10	14.15	—/—	5041871874	—/—	5041871871	5041871870	18
3.5	8.75	12.9	5041871676	5041871674	5041871672	5041871671	5041871670	16
C	B	A	エンボス梱包 EMBOSSED TAPE PACKAGE / オーダー番号 ORDER NO.	エンボス梱包 EMBOSSED TAPE PACKAGE / オーダー番号 ORDER NO.	エンボス梱包 EMBOSSED TAPE PACKAGE / オーダー番号 ORDER NO.	エンボス梱包 EMBOSSED TAPE PACKAGE / オーダー番号 ORDER NO.	エンボス梱包 EMBOSSED TAPE PACKAGE / オーダー番号 ORDER NO.	極数 CKT. NO.

部品 PART	材質 MATERIAL
ハウジング HOUSING	ポリアミド(PA), ガラス充填, ＵＬ９４Ｖ－０, 色：表参照 POLYAMIDE(PA), GALASS FILLED, UL94V-0, COLOR : SEE TABLE
ピン PIN	黄銅 BRASS
	錫めっき : 1.0 micro-meter MIN. TIN
	ニッケルめっき（下地）: 0.5 micro-meter MIN. NICKEL (UNDER PLATING)

GENERAL TOLERANCES (UNLESS SPECIFIED)

0.25	UNDER		±0.03
0.25	OVER	0.5	UNDER ±0.05
0.5	OVER	1.0	UNDER ±0.1
1.0	OVER	10	UNDER ±0.2
10	OVER	30	UNDER ±0.25
30	OVER		±0.3

THIS DRAWING CONTAINS INFORMATION THAT IS PROPRIETARY TO MOLEX ELECTRONIC TECHNOLOGIES, LLC AND SHOULD NOT BE USED WITHOUT WRITTEN PERMISSION

DIMENSION UNITS: mm
SCALE: 5:1

GENERAL TOLERANCES (UNLESS SPECIFIED)	MM	INCH
4 PLACES		±
3 PLACES	±	±
2 PLACES	±	±
1 PLACE	±	±
0 PLACES	±	±
ANGULAR TOL	± 1.0 °	

DRAFT WHERE APPLICABLE MUST REMAIN WITHIN DIMENSIONS

CURRENT REV DESC: OBSOLETE PART NUMBER

EC NO: 618242
DRWN: AKUMAR19 2019/03/29
CHK'D: GGA 2020/02/28
APPR: GGA 2020/02/28

INITIAL REVISION:
DRWN: SSATO02 2013/07/25
APPR: NUKITA 2013/08/08

THIRD ANGLE PROJECTION | DRAWING: A3-SIZE | SERIES: 504187

molex

MICRO-LOCK
1.25 WTB DUAL ST SMT PLUG ASS'Y

PRODUCT CUSTOMER DRAWING

DOCUMENT NUMBER	DOC TYPE	DOC PART	REVISION
SD-504187-002	PSD	001	C

MATERIAL NUMBER	CUSTOMER	SHEET NUMBER
SEE TABLE	GENERAL MARKET	1 OF 2

DOCUMENT STATUS	P1	RELEASE DATE	2020/02/28 02:33:19

FORMAT: Met-land-letter-tb-prod-A3
REVISION: D
DATE: 2018/01/11

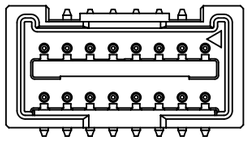
16 CKT.

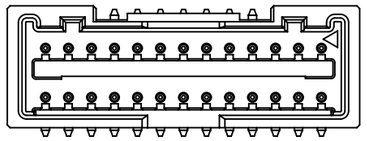
26 CKT.

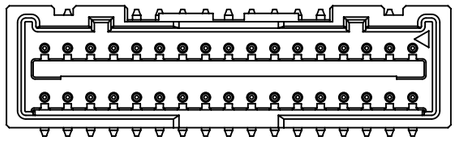
34 CKT.

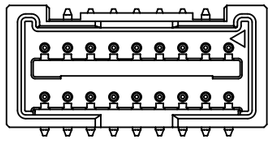
18 CKT.

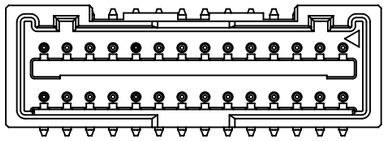
28 CKT.

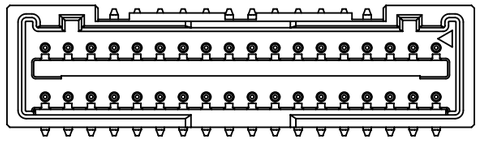
36 CKT.

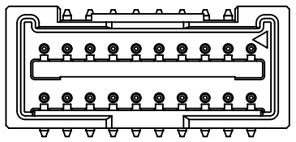
20 CKT.

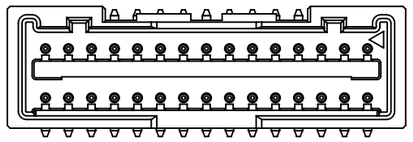
30 CKT.

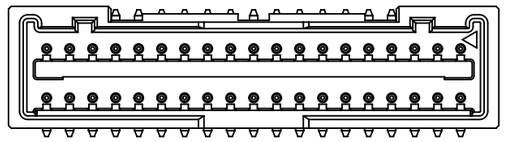
38 CKT.

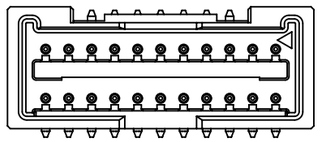
22 CKT.

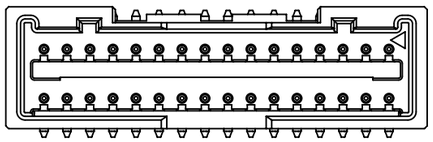
32 CKT.

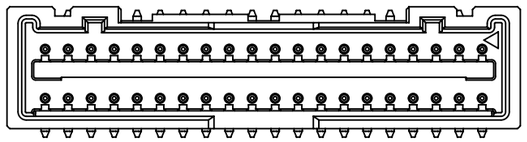
40 CKT.

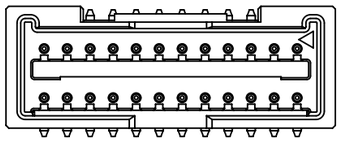
24 CKT.

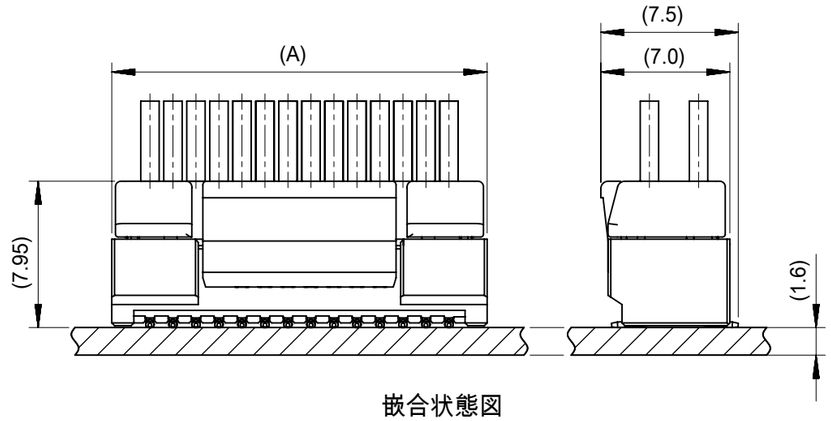

嵌合状態図

MATED CONNECTORS

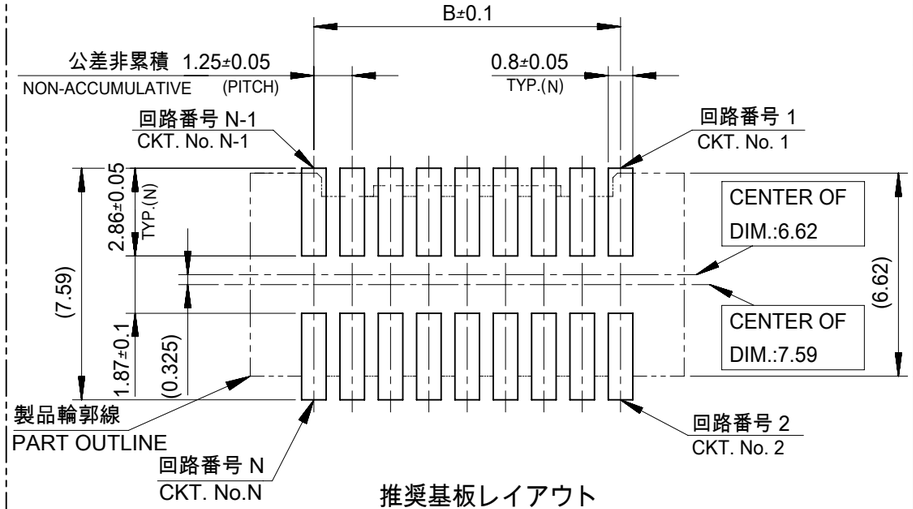

推奨基板レイアウト

RECCOMENDED P.W.B. PATTERN LAYOUT

(参考：メタルマスク厚さ：150μm, マスク開口率100%)

(REFERENCE : MATAL MASK THICKNESS : 150μm, APERTURE RATIO : 100%)

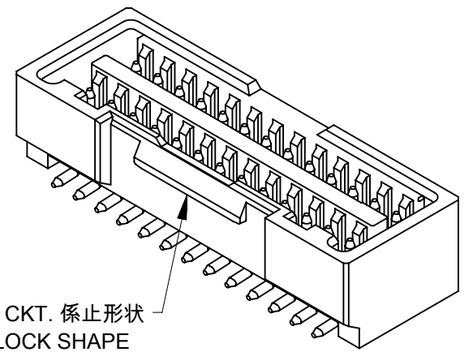

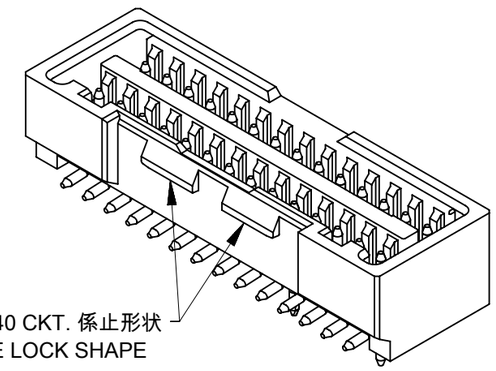

GENERAL TOLERANCES (UNLESS SPECIFIED)	
0.25 UNDER	±0.03
0.25 OVER 0.5 UNDER	±0.05
0.5 OVER 1.0 UNDER	±0.1
1.0 OVER 10 UNDER	±0.2
10 OVER 30 UNDER	±0.25
30 OVER	±0.3

THIS DRAWING CONTAINS INFORMATION THAT IS PROPRIETARY TO MOLEX ELECTRONIC TECHNOLOGIES, LLC AND SHOULD NOT BE USED WITHOUT WRITTEN PERMISSION

DIMENSION UNITS: mm | SCALE: 3:1

GENERAL TOLERANCES (UNLESS SPECIFIED)

	MM	INCH
4 PLACES	±	±
3 PLACES	±	±
2 PLACES	±	±
1 PLACE	±	±
0 PLACES	±	±
ANGULAR TOL	± 1.0 °	

DRAFT WHERE APPLICABLE MUST REMAIN WITHIN DIMENSIONS

CURRENT REV DESC: OBSOLETE PART NUMBER

EC NO: 618242

DRWN: AKUMAR19 2019/03/29

CHK'D: GGA 2020/02/28

APPR: GGA 2020/02/28

INITIAL REVISION:

DRWN: SSATO02 2013/07/25

APPR: NUKITA 2013/08/08

THIRD ANGLE PROJECTION | DRAWING: A3-SIZE | SERIES: 504187

molex

MICRO-LOCK
1.25 WTB DUAL ST SMT PLUG ASS'Y

PRODUCT CUSTOMER DRAWING

DOCUMENT NUMBER	DOC TYPE	DOC PART	REVISION
SD-504187-002	PSD	001	C

MATERIAL NUMBER	CUSTOMER	SHEET NUMBER
SEE TABLE	GENERAL MARKET	2 OF 2

DOCUMENT STATUS	P1	RELEASE DATE	2020/02/28 02:33:19

FORMAT: Met-prod-master-tb-prod-A3
REVISION: D
DATE: 2018/01/11