NOTES:

1. MATERIALS AND FINISHES:
   BODY - BERYLLIUM COPPER, GOLD PLATING
   CONTACT - BERYLLIUM COPPER, GOLD PLATING
   SPRING RING - BERYLLIUM COPPER, NICKEL PLATING
   FERRULE - COPPER, NICKEL PLATING
   INSULATOR - PTFE, NATURAL

2. ELECTRICAL:
   A. IMPEDANCE: 50 OHM
   B. FREQUENCY RANGE: DC - 6 GHz
   C. VSWR(RETURN LOSS): 1.14 (-24 dB) @ DC - 2 GHz
      1.22 (-20 dB) @ 2 - 4 GHz
      1.38 (-16 dB) @ 4 - 6 GHz
   D. DIELECTRIC WITHSTANDING VOLTAGE: 1000 VRMS, MIN.
   E. POWER HANDLING: 40 W MAX. @ 2.6 GHz AT 85°C

3. MECHANICAL:
   A. DURABILITY: 200 CYCLES MIN. FOR SMOOTH BORE
      50 CYCLES MIN FOR LIMITED DETENT
   B. TEMPERATURE RANGE: -55°C TO +125°C

4. PACKAGING:
   A. QUANTITY: SINGLE PACK
   B. MARKING: PACKAGING TO BE MARKED
      "AMPHENOL RF, 920-510P-51S & DATE CODE"

5. CRIMPED FERRULE
   HEX CRIMP SIZE .128"

6. SOLDER CONTACT TO CABLE CENTER CONDUCTOR

THIRD ANGLE PROJ.

REVISIONS				
REV	DESCRIPTION	DATE	ECN	APPR
A	RELEASE TO MFG.	25-Apr-19	11305	EH

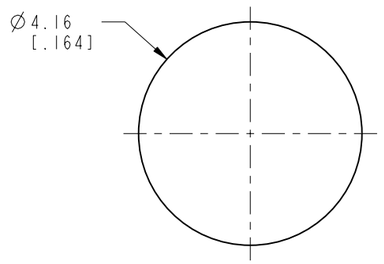

RECOMMENDED PANEL HOLE SIZE

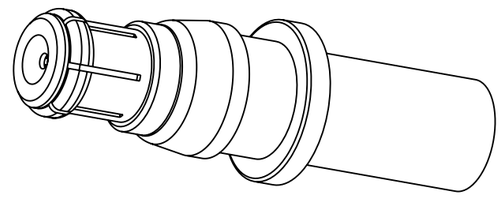

SCALE 5.000

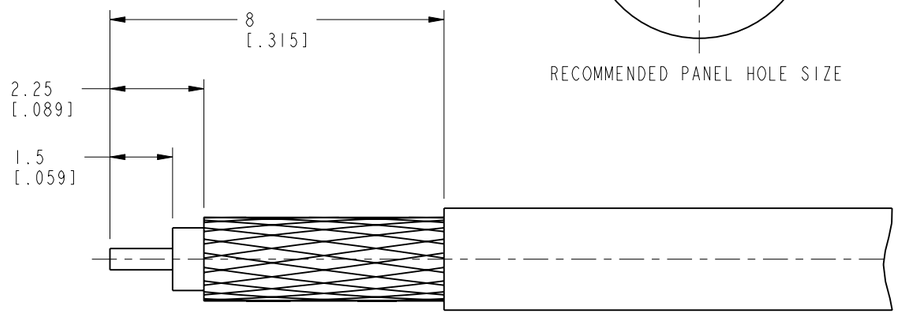

RECOMMENDED CABLE STRIPPING DIMENSIONS

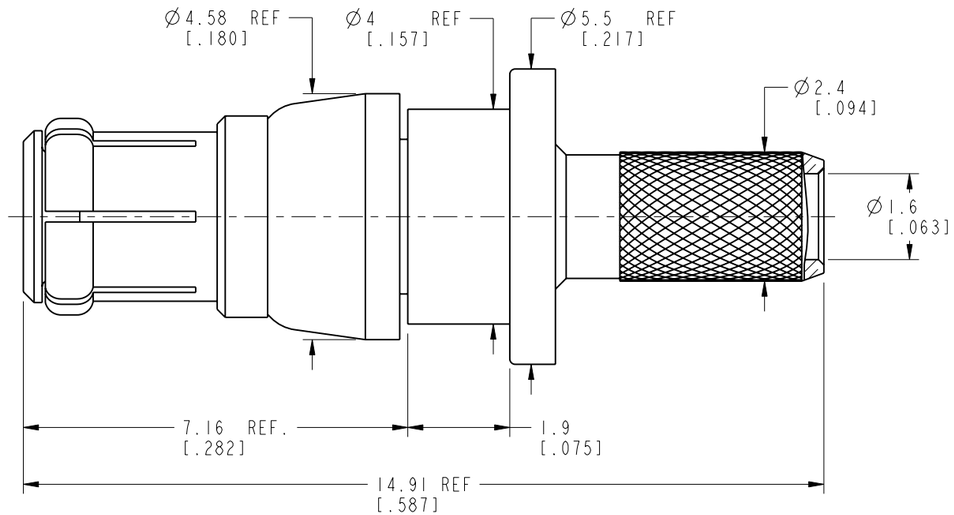

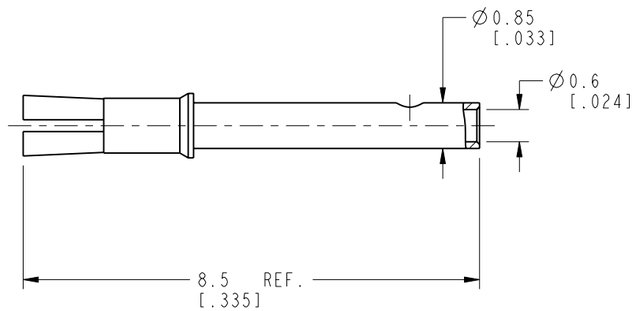

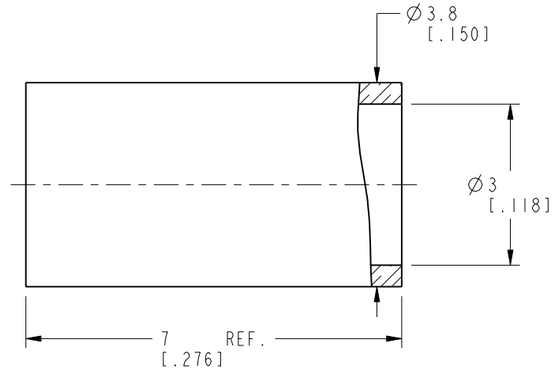

CUSTOMER OUTLINE DRAWING

ALL OTHER SHEETS ARE FOR INTERNAL USE ONLY

UNLESS OTHERWISE SPECIFIED, DIMENSIONS ARE IN METRIC AND TOLERANCES ARE:

<0.5mm	0.5 - 6mm	6 - 30mm	30 - 120mm	ANGLES
± 0.05mm	±0.1mm	±0.2mm	± 0.3mm	±1°

NOTICE - These drawings, specifications, or other data (1) are, and remain the property of Amphenol corp. (2) must be returned upon request; and (3) are confidential and not to be disclosed to any person other than those to whom they are given by Amphenol Corp. the furnishing of these drawings, specifications, or other data by Amphenol Corp., or to any other person to anyone for any purpose is not to be regarded by implication or otherwise in any manner licensing, granting rights to permitting such holder or any other person to manufacture, use or sell any product, process or design, patented or otherwise, that may in any way be related to or disclosed by said drawings, specifications, or other data.

MATERIAL
NOTE 1

REFERENCE
EAR# 8405
REF: ---

CONFIGURATION LEVEL: In Work

FINISH

DRAWN	M.ZHANG	DATE 25-Apr-19
ENGINEER	E. HILL	DATE 27-Dec-18
APPROVED	S.HSIEH	DATE 28-Apr-19
CAD FILE		

TITLE
HD-EFI PLUG FOR
RG-316 CABLE

SCALE: 9.0:1.0 | SHEET 2 OF 2

DWG SIZE: B | REV: A

Amphenol RF
www.amphenolrf.com

DRAWING NO. 920-510P-51S
ITEM NO. 920-510P-51S
PART NO. 920-510P-51S