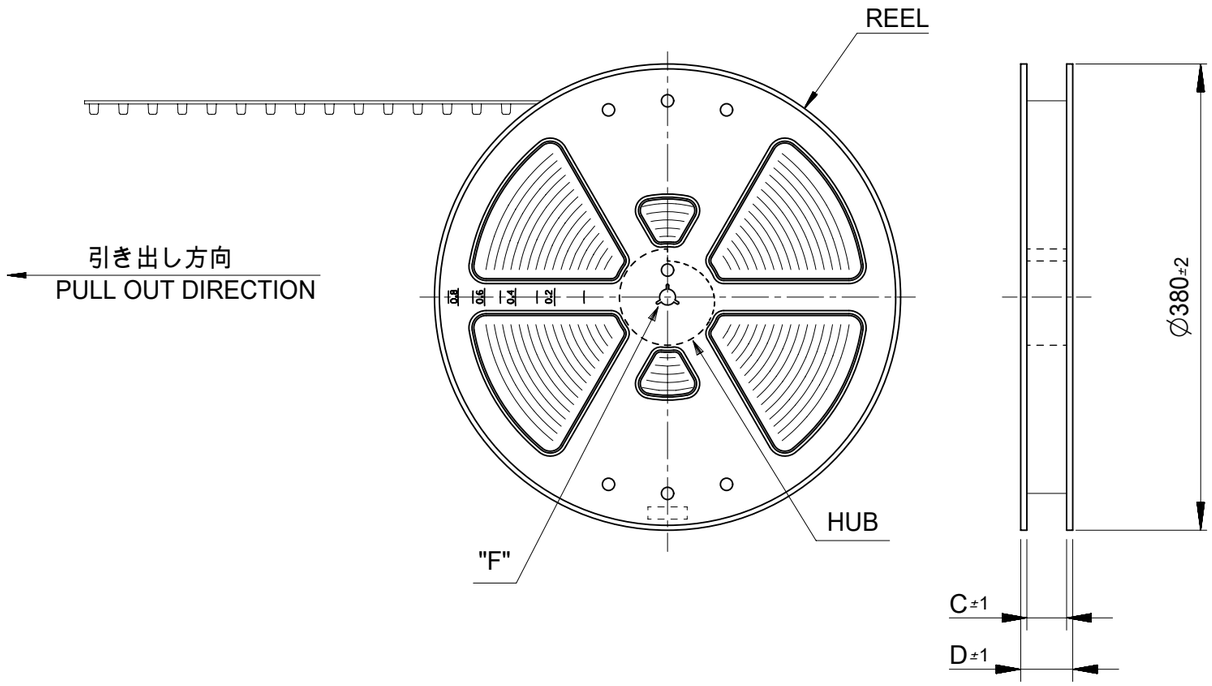

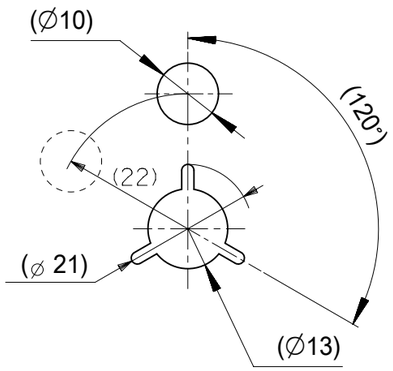

DETAIL "F"

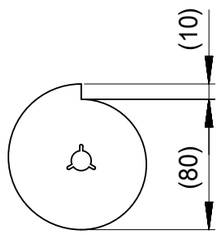

HUB

注記 NOTES

1. 梱包数量： 900 個 / リール
   NUMBER OF CONNECTORS:900 PCS/REEL

2. リードテープ長さ
   LEAD TAPE LENGTH

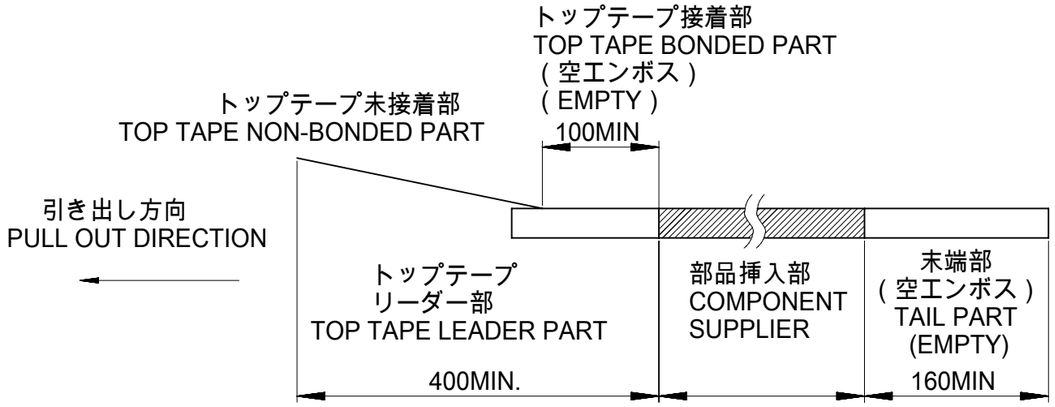

3. トップテープの剥離強度については、IEC60286-3に準拠。
   TOP TAPE PEEL FORCE IS DEFINED BY IEC60286-3.

4. 製品詳細寸法については図面 5017861002 DOC. PART 000を参照下さい。
   RE DETAILED DIMENSION, SEE 5017861002 DOC. PART 000.

5. 材料(MATERIAL)
   キャリアテープ(CARRIER TAPE) : ポリスチレン(POLYSTYRENE)
   トップテープ(TOP TAPE) : PET, PE, PE
   リール(REEL) : ポリスチレン(POLYSTYRENE)
   リサイクル材を含む
   RECYCLE MATERILAL CONTAINED

キャリアテープ幅 CARRIER TAPE WIDTH	G	F	E	D	C	B	A	EMBOSSED PACKAGE オーダー番号 ORDER No.	Circuit
56	56.0	52.4	26.2	61.4	57.4	25.68	33.3	5017865091	50
44	44.0	40.4	20.2	49.4	45.4	20.68	28.3	5017864091	40
						15.68	23.3	5017863091	30

THIS DRAWING CONTAINS INFORMATION THAT IS PROPRIETARY TO MOLEX ELECTRONIC TECHNOLOGIES, LLC AND SHOULD NOT BE USED WITHOUT WRITTEN PERMISSION

DIMENSION UNITS	SCALE
mm	1:1

GENERAL TOLERANCES (UNLESS SPECIFIED)

ANGULAR TOL	±	3.0 °
4 PLACES	±	0.2
3 PLACES	±	0.2
2 PLACES	±	0.25
1 PLACE	±	0.3
0 PLACES	±	0.3

DRAFT WHERE APPLICABLE MUST REMAIN WITHIN DIMENSIONS

CURRENT REV DESC:

EC NO: 628512
DRWN: SKITAZAWA 2020/02/04
CHK'D: HSHIMOYAMA 2020/02/04
APPR: SHOSHIKAWA 2020/02/04

INITIAL REVISION:
DRWN: VLM 2016/02/17
APPR: TKUSUHARA01 2017/04/28

THIRD ANGLE PROJECTION | DRAWING: A3-SIZE | SERIES: 501786

molex

EMBSTP PKG FOR
0.5 FFC TO BOARD ST TYPE

PRODUCT CUSTOMER DRAWING

DOCUMENT NUMBER	DOC TYPE	DOC PART	REVISION
5017860002	PSD	000	C

MATERIAL NUMBER	CUSTOMER	SHEET NUMBER
SEE CHART	GENERAL MARKET	1 OF 2

DOCUMENT STATUS	P1	RELEASE DATE	2020/02/04 13:34:54

FORMAT: mxstp_tb_mod_A3
REVISION: H
DATE: 2018/01/16

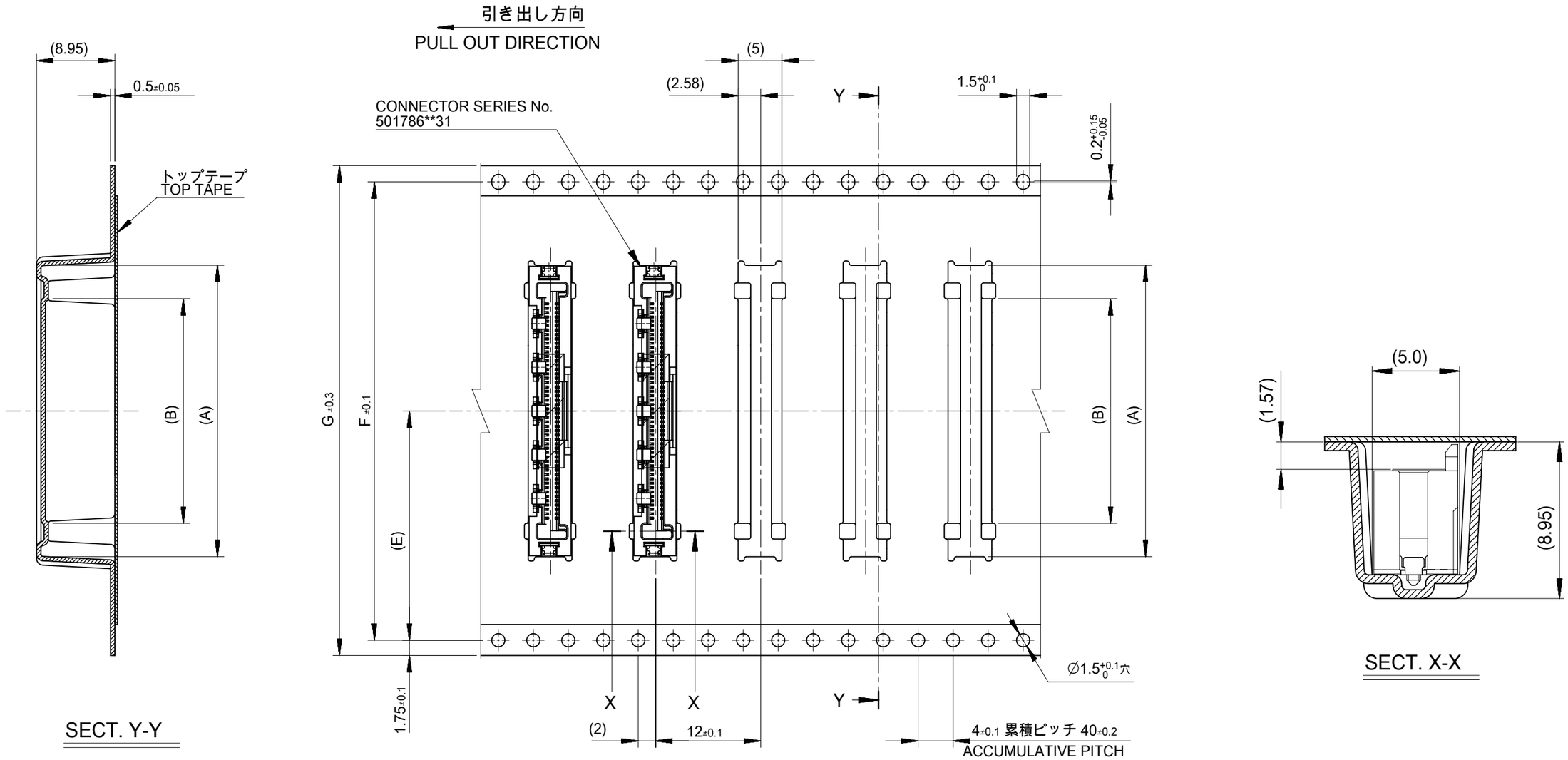

THIS DRAWING CONTAINS INFORMATION THAT IS PROPRIETARY TO MOLEX ELECTRONIC TECHNOLOGIES, LLC AND SHOULD NOT BE USED WITHOUT WRITTEN PERMISSION

DIMENSION UNITS	SCALE
mm	1:1

GENERAL TOLERANCES (UNLESS SPECIFIED)

ANGULAR TOL	±	3.0 °
4 PLACES	±	0.2
3 PLACES	±	0.2
2 PLACES	±	0.25
1 PLACE	±	0.3
0 PLACES	±	0.3

DRAFT WHERE APPLICABLE MUST REMAIN WITHIN DIMENSIONS

CURRENT REV DESC:

EC NO: 628512
DRWN: SKITAZAWA 2020/02/04
CHK'D: HSHIMOYAMA 2020/02/04
APPR: SHOSHIKAWA 2020/02/04

INITIAL REVISION:
DRWN: VLM 2016/02/17
APPR: TKUSUHARA01 2017/04/28

THIRD ANGLE PROJECTION | DRAWING: A3-SIZE | SERIES: 501786

molex

EMBSTP PKG FOR
0.5 FFC TO BOARD ST TYPE

PRODUCT CUSTOMER DRAWING

DOCUMENT NUMBER	DOC TYPE	DOC PART	REVISION
5017860002	PSD	000	C

MATERIAL NUMBER	CUSTOMER	SHEET NUMBER
SEE CHART	GENERAL MARKET	2 OF 2

DOCUMENT STATUS	P1	RELEASE DATE	2020/02/04	13:34:54

FORMAT: master-tb-mod-A3
REVISION: H
DATE: 2018/01/18

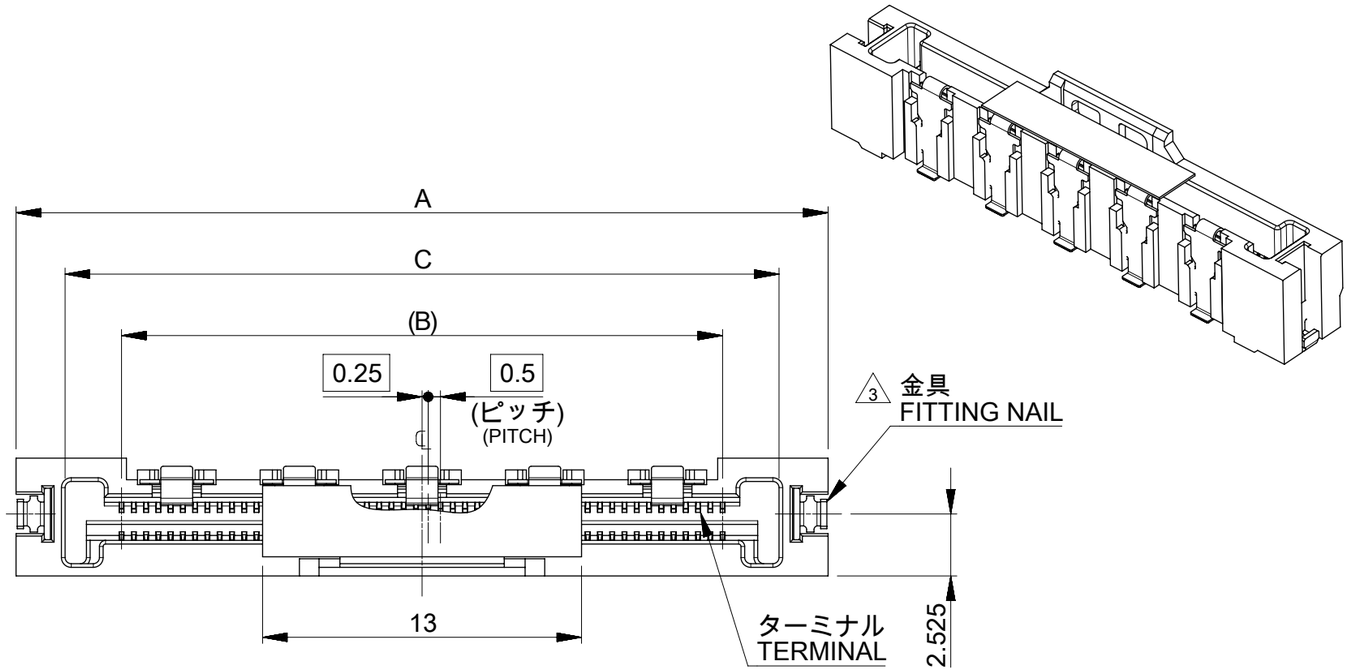

注記　NOTES

1. 使用材料 MATERIAL
   ハウジング : 液晶ポリマー(LCP)、ガラス充填、UL94V-0 、黒色
   ターミナル : 銅合金 (t=0.18)
   補強金具 : 銅合金 (t=0.25)
   グランド端子 : 銅合金 (t=0.15)
   HOUSING : LIQUID CRYSTAL POLYMER(LCP), GLASS FILLED, UL94V-0, BLACK
   TERMINAL : COPPER ALLOY (t=0.18)
   FITTING NAIL : COPPER ALLOY (t=0.25)
   GROUND TERMINAL : COPPER ALLOY (t=0.15)

2. めっき仕様 PLATING
   ターミナル
   コンタクト : 金めっき(0.1μm以上)　下地 : ニッケルめっき(1.0μm以上)
   ソルダーテール : 金めっき　下地 : ニッケルめっき
   補強金具 : 錫めっき(1.0μm以上)　下地 : ニッケルめっき
   グランド端子 : 錫めっき(1.0μm以上)　下地 : ニッケルめっき
   TERMINAL
   CONTACT AREA : GOLD PLATING(0.1μm MAX)　UNDERPLATING : NICKEL PLATING(1.0μmMAX)
   SOLDER TAIL AREA : GOLD PLATING　UNDERPLATING : NICKEL PLATING
   FITTING NAIL : TIN PLATING(1.0μmMAX)　UNDER PLATING : NICKEL PLATING
   GROUND TERMINAL : TIN PLATING(1.0μmMAX)　UNDER PLATING : NICKEL PLATING

3 パターン剥離止め用補強金具
FITTING NAIL FOR PREVENTION OF PEELING OF P.C.B. PATTERN.

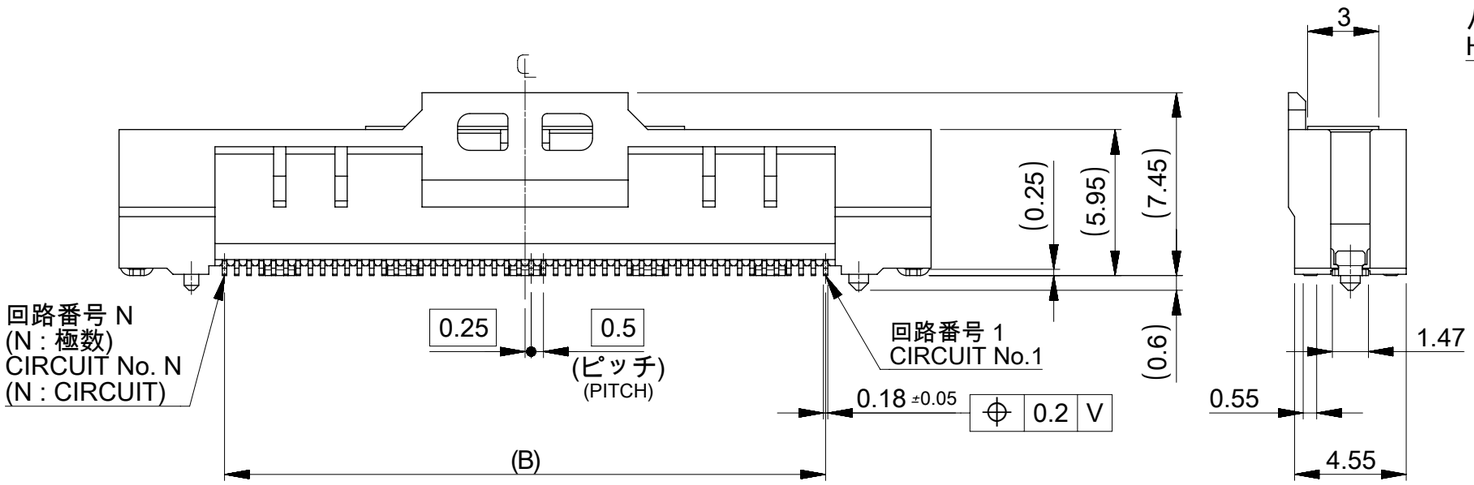

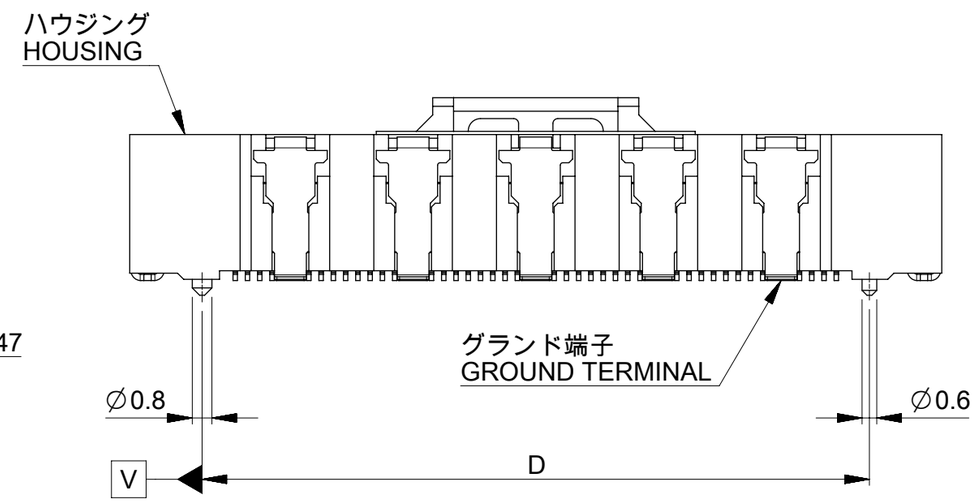

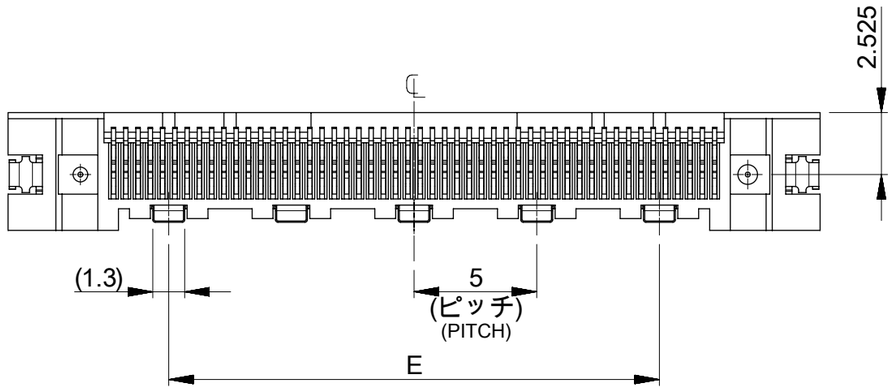

QTY of Ground Terminal	E	D	C	B	A	EMBOSSED PACKAGE オーダー番号 ORDER No.	Circuit
5	20	27.2	29.1	24.5	33.1	5017865091	50
4	15	22.2	24.1	19.5	28.1	5017864091	40
3	10	17.2	19.1	14.5	23.1	5017863091	30

THIS DRAWING CONTAINS INFORMATION THAT IS PROPRIETARY TO MOLEX ELECTRONIC TECHNOLOGIES, LLC AND SHOULD NOT BE USED WITHOUT WRITTEN PERMISSION

DIMENSION UNITS	SCALE
mm	4:1

GENERAL TOLERANCES (UNLESS SPECIFIED)

ANGULAR TOL	±	3.0 °
4 PLACES	±	0.2
3 PLACES	±	0.2
2 PLACES	±	0.25
1 PLACE	±	0.3
0 PLACES	±	0.3

DRAFT WHERE APPLICABLE MUST REMAIN WITHIN DIMENSIONS

CURRENT REV DESC:

EC NO: 628512
DRWN: SKITAZAWA 2020/02/04
CHK'D: HSHIMOYAMA 2020/02/04
APPR: SHOSHIKAWA 2020/02/04

INITIAL REVISION:
DRWN: NKURAHATTI 2016/02/26
APPR: TKUSUHARA01 2017/04/28

THIRD ANGLE PROJECTION | DRAWING A3-SIZE | SERIES 501786

molex

0.5 FFC TO BOARD CONN REC HSG ASSY(ST)

PRODUCT CUSTOMER DRAWING

DOCUMENT NUMBER	DOC TYPE	DOC PART	REVISION
5017861002	PSD	000	D

MATERIAL NUMBER	CUSTOMER	SHEET NUMBER
SEE CHART	GENERAL MARKET	1 OF 3

CONNECROT SERIES No. 501786**31

DOCUMENT STATUS	P1	RELEASE DATE	2020/02/04 13:34:56

FORMAT: master-tb-mod-A3
REVISION: H
DATE: 2018/01/16

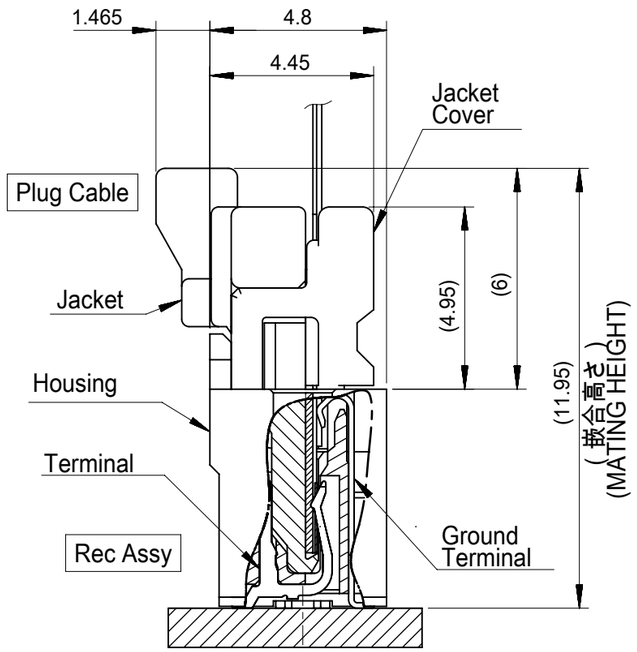

大ラッチジャケット嵌合断面図
LARGE LATCH JACKET
MATED CONNECTOR SECTION

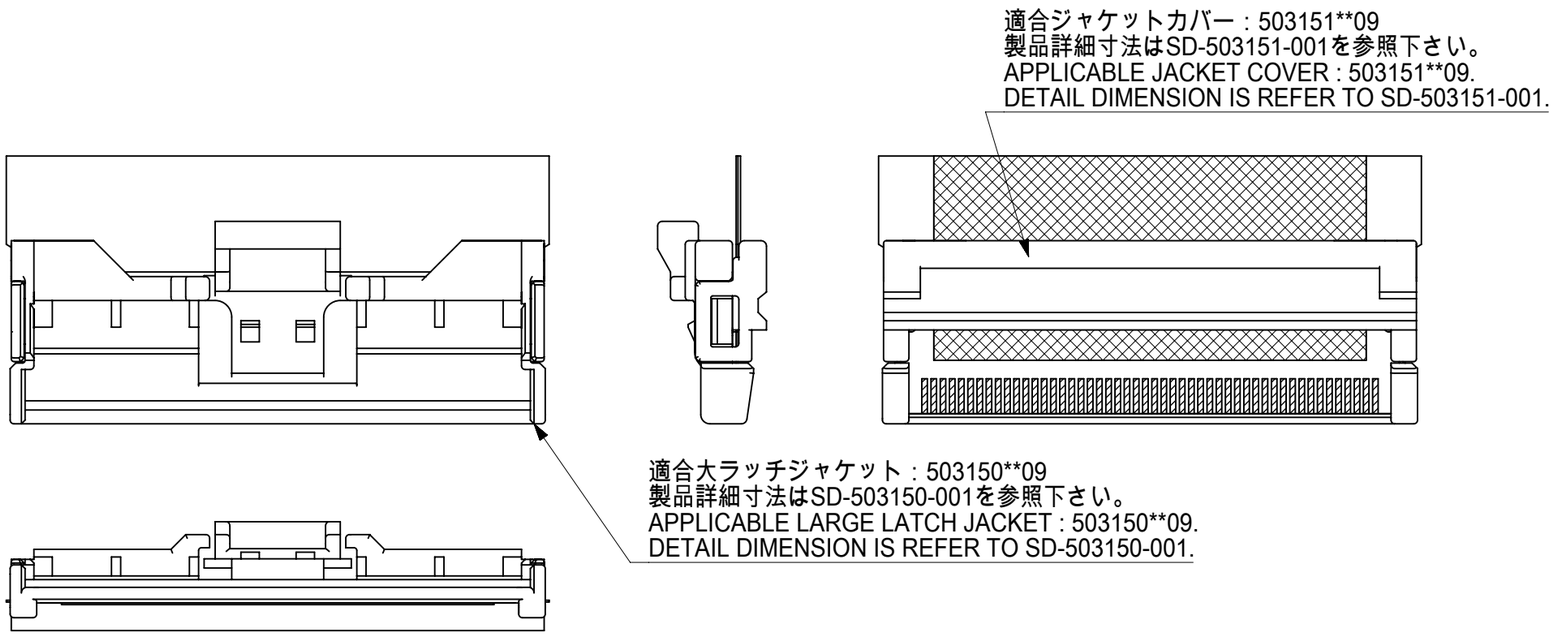

大ラッチジャケット
LARGE LATCH JACKET

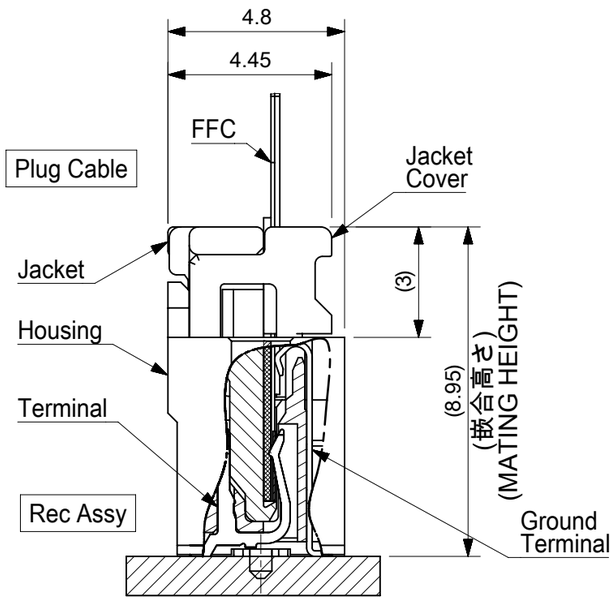

小ラッチジャケット嵌合断面図
SMALL LATCH JACKET
MATED CONNECTOR SECTION

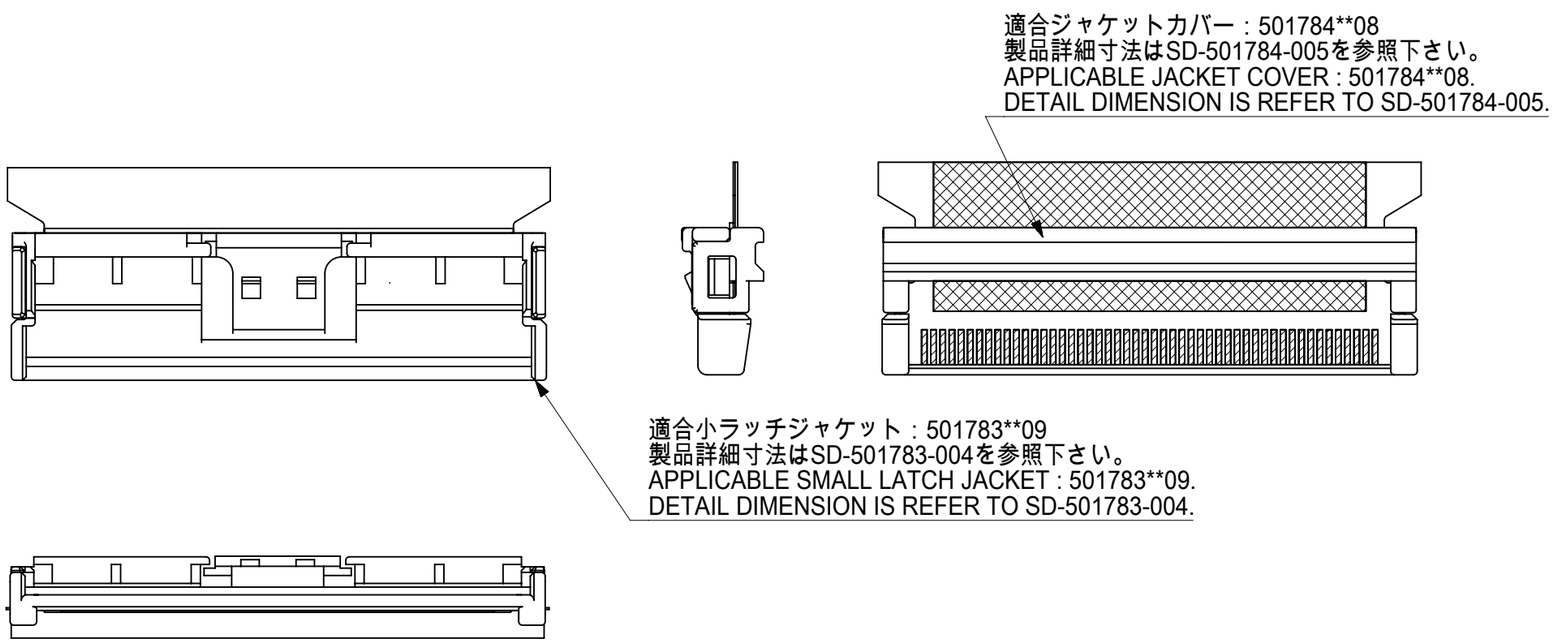

小ラッチジャケット
SMALL LATCH JACKET

THIS DRAWING CONTAINS INFORMATION THAT IS PROPRIETARY TO MOLEX ELECTRONIC TECHNOLOGIES, LLC AND SHOULD NOT BE USED WITHOUT WRITTEN PERMISSION

DIMENSION UNITS	SCALE
mm	1:1

GENERAL TOLERANCES (UNLESS SPECIFIED)

ANGULAR TOL	±	3.0°
4 PLACES	±	0.2
3 PLACES	±	0.2
2 PLACES	±	0.25
1 PLACE	±	0.3
0 PLACES	±	0.3

DRAFT WHERE APPLICABLE MUST REMAIN WITHIN DIMENSIONS

CURRENT REV DESC:

EC NO: 628512
DRWN: SKITAZAWA 2020/02/04
CHK'D: HSHIMOYAMA 2020/02/04
APPR: SHOSHIKAWA 2020/02/04

INITIAL REVISION:
DRWN: NKURAHATTI 2016/02/26
APPR: TKUSUHARA01 2017/04/28

THIRD ANGLE PROJECTION

DRAWING	SERIES
A3-SIZE	501786

molex

0.5 FFC TO BOARD CONN REC HSG ASSY(ST)

PRODUCT CUSTOMER DRAWING

DOCUMENT NUMBER	DOC TYPE	DOC PART	REVISION
5017861002	PSD	000	D

MATERIAL NUMBER	CUSTOMER	SHEET NUMBER
SEE CHART	GENERAL MARKET	2 OF 3

DOCUMENT STATUS	P1	RELEASE DATE	2020/02/04	13:34:56

FORMAT: master-tb-mod-A3
REVISION: H
DATE: 2018/01/18

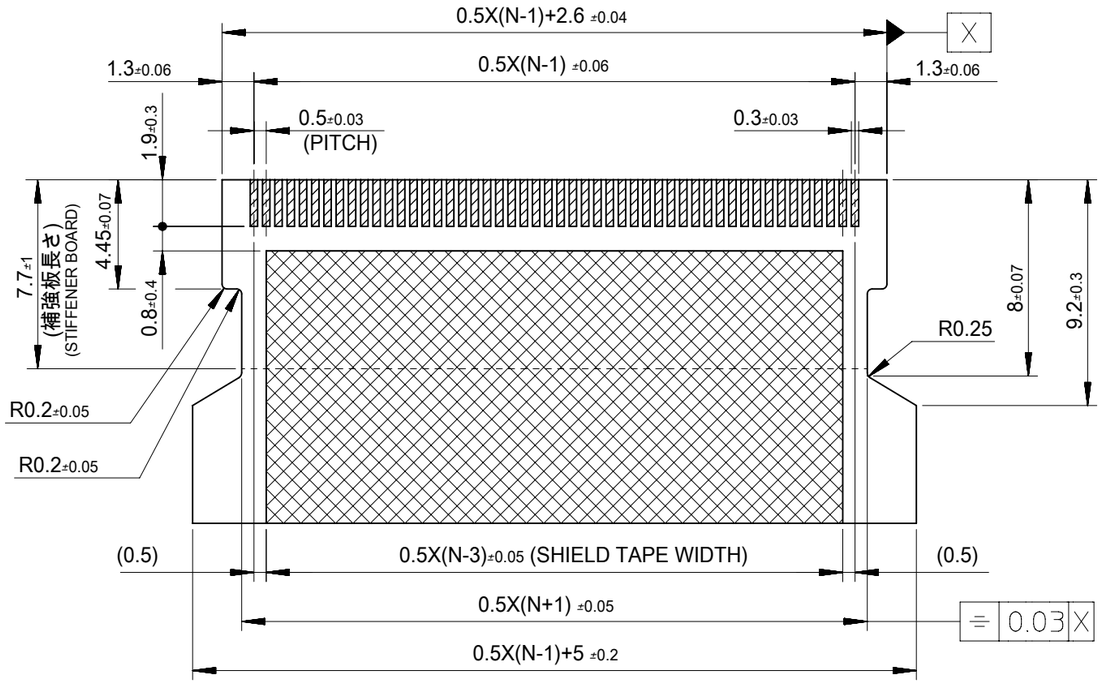

適合FFC推奨寸法
APPLICABLE FFC RECOMENDED DIMENSION

仕上がり厚さ THICKNESS
コネクタ接点部： 0.3±0.03
CONNECTOR CONTACT PORTION : 0.3±0.03
シールド部 : 0.44±0.05
SHIELD PORTION : 0.44±0.05

コネクタ接点部
CONNECTOR CONTACT PORTION

シールド部
SHIELD PORTION

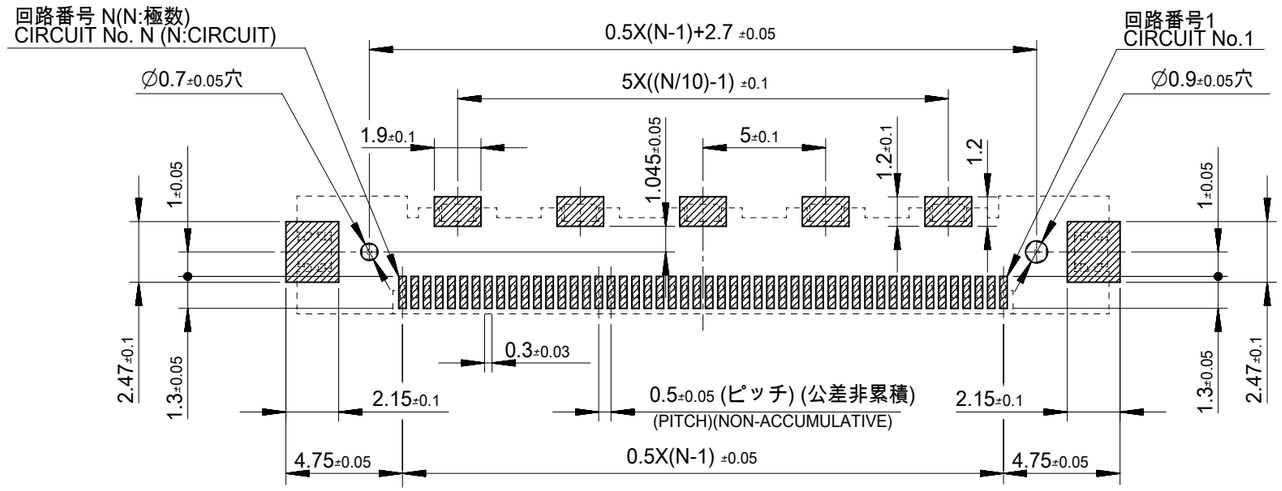

参考基板レイアウト
P.C.BOARD PATTERN DIMENSION(REF.)
(マウント面) (MOUNTING SIDE)

参考マスク厚：120μm
REFERENCE SCREEN THICKNESS : 120μm
参考マスク開口率：100%
REFERENCE SCREEN OPEN RATIO : 100%

FFCについて　ABOUT FFC

打ち抜き方向は導体側から補強板側を推奨します。
導体部については軟箔銅35μmまたは50μmを推奨します。
FFCに規定された定格温度がFFC単体前提である場合が御座います。
コネクタと組み合わせての実使用において、接着層が劣化するなどの信頼性を満足できないケースを回避するため、
実機での評価/確認をお願いいたします。
RECOMMENDED PUNCHING DIRECTION : FROM CONDUCTOR SIDE TO STIFFENER SIDE
RECOMMENDED CONDUCTOR SPEC : SOFT COPPER FOIL
RECOMMENDED CONDUCTOR THICKNESS : 35 MICROMETER OR 50 MICROMETER
NOTE : WHEN ACTUALLY USING IT WITH CONNECTOR, PLEASE DO THE EVALUATION AND THE CONFIRMATION WITH AN ACTUAL EQUIPMENT TO EVADE THE CASE WHERE RELIABILITY CANNOT BE FILLED (THE ADHESIVE LINE OF FFC IS DETERIORATED ETC.)

THIS DRAWING CONTAINS INFORMATION THAT IS PROPRIETARY TO MOLEX ELECTRONIC TECHNOLOGIES, LLC AND SHOULD NOT BE USED WITHOUT WRITTEN PERMISSION

DIMENSION UNITS	SCALE
mm	1:1

GENERAL TOLERANCES (UNLESS SPECIFIED)

ANGULAR TOL	±	3.0 °
4 PLACES	±	0.2
3 PLACES	±	0.2
2 PLACES	±	0.25
1 PLACE	±	0.3
0 PLACES	±	0.3

DRAFT WHERE APPLICABLE MUST REMAIN WITHIN DIMENSIONS

CURRENT REV DESC:

EC NO: 628512
DRWN: SKITAZAWA 2020/02/04
CHK'D: HSHIMOYAMA 2020/02/04
APPR: SHOSHIKAWA 2020/02/04

INITIAL REVISION:
DRWN: NKURAHATTI 2016/02/26
APPR: TKUSUHARA01 2017/04/28

THIRD ANGLE PROJECTION | DRAWING: A3-SIZE | SERIES: 501786

molex

0.5 FFC TO BOARD CONN REC HSG ASSY(ST)

PRODUCT CUSTOMER DRAWING

DOCUMENT NUMBER	DOC TYPE	DOC PART	REVISION
5017861002	PSD	000	D

MATERIAL NUMBER	CUSTOMER	SHEET NUMBER
	GENERAL MARKET	3 OF 3

DOCUMENT STATUS	P1	RELEASE DATE	2020/02/04 13:34:56

FORMAT: master-tb-prod-A3
REVISION: H
DATE: 2018/01/18