Quartz Crystal Specification

IQD Part No. + Packaging: LFXTAL084885Reel

Wurth Part No. ***830108488501***

Description

- 3.2 x 1.5mm SMD crystal in a ceramic package with a seam sealed metal lid, hermetically sealed.
- Model IQXC-217
- Model Issue number 1

Frequency Parameters

- Frequency 32.7680kHz
- Frequency Tolerance ±20.00ppm
- Tolerance Condition @ 25°C ±5°C
- Overtone Order Fundamental
- Ageing ±3ppm max in 1st year @ 25°C

Electrical Parameters

- Load Capacitance (CL) 6.00pF
- Shunt Capacitance (C0) 1.5pF max
- Drive Level 0.1µW typ, 0.5µW max
- ESR 70.00kΩ max

Outline (mm)

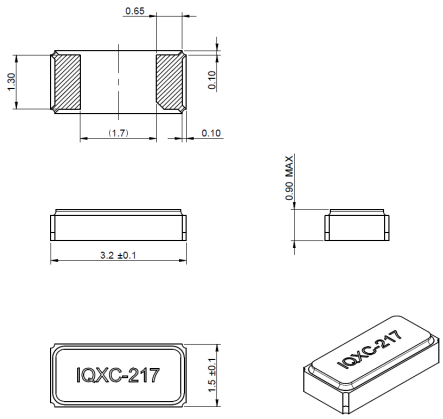

Environmental Parameters

- Storage Temperature Range: –55 to 125°C
- Drop: 150g dummy, 180cm drop (6 directions x 3 times) onto concrete board
- Vibration: 1.5mm amplitude, 10Hz-60Hz with cycle time 2-3 minutes in 3 directions (X, Y and Z axis) each for 2 hours

Manufacturing Details

- RoHS Terminations NiAu
- RoHS Reflow Temp 260°C max for 10s max

Compliance

- RoHS Status (2015/863/EU) Compliant
- REACh Status Compliant
- MSL Rating (JDEC-STD-033): Not Applicable

Recommended Solder Pad Layout

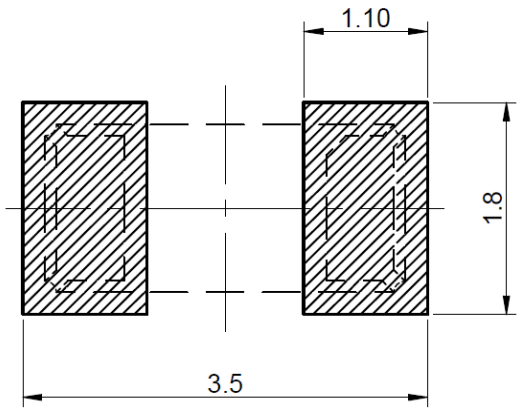

Packaging Details

- Pack Style: Reel Tape & reel in accordance with EIA-481-D
  Pack Size: 3,000
- *Alternative packing option available*

U S E F U L L I N K S

Toolbox:

www.we-online.com/toolbox

Product Catalog:

www.we-online.com/products

CONTACT INFORMATION:
Würth Elektronik eiSos GmbH & Co. KG
Max-Eyth-Str. 1, 74638 Waldenburg, Germany
Tel: +49(0) 7942 945-0

Email: eiSos@we-online.de
Web: www.we-online.com

Typical Frequency Stability Characteristics

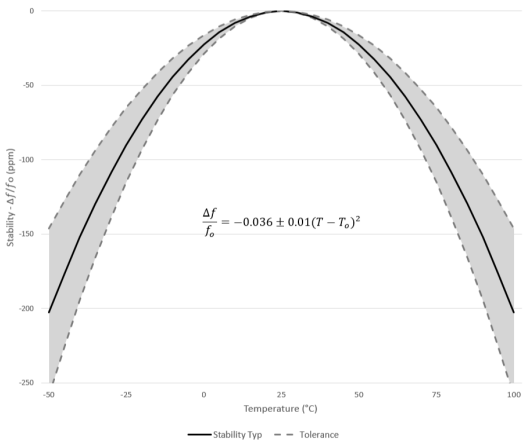

CONTACT INFORMATION:

Würth Elektronik eiSos GmbH & Co. KG
Max-Eyth-Str. 1, 74638 Waldenburg, Germany
Tel: +49(0) 7942 945-0

Email: eiSos@we-online.de
Web: www.we-online.com