LISA2-WWW-CLIP

~80° wide beam optimized for 3535 size LED packages. 6.6 mm high variant with clip installation.

TECHNICAL SPECIFICATIONS:

Dimensions	Ø 9.9 mm
Height	6.6 mm
Fastening	glue, clips
ROHS compliant	yes

MATERIAL SPECIFICATIONS:

Component	Type	Material	Colour	Finish
LISA2-WWW	Single lens	PMMA	clear	
LISA2-HLD-CLIP-OSL	Holder	PC	black	

ORDERING INFORMATION:

Component		Qty in box	MOQ	MPQ	Box weight (kg)
FP11958_LISA2-WWW-CLIP » Box size:	Single lens		300	100	1.4

LEDiL is a registered trademark of LEDiL Oy in the European Union, USA, and certain other countries.

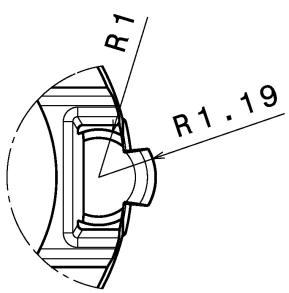

Detail A
Scale: 8:1

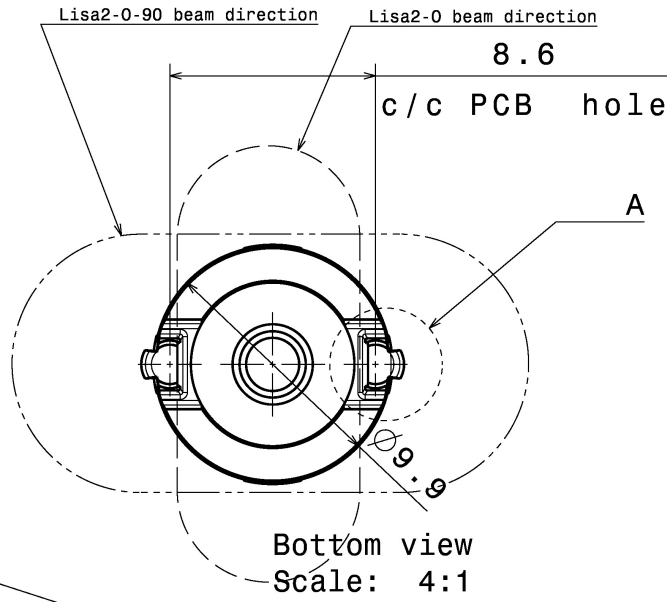

Bottom view
Scale: 4:1

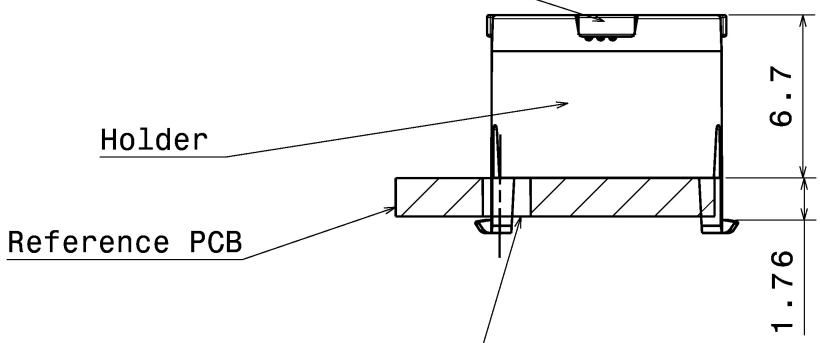

Materials:
Lens PMMA
Holder PC

Note:
Take tolerances into account when specifying positioning holes for PCB

Front view
Scale: 4:1

This drawing is our property. It can't be reproduced or communicated without our written agreement.

Ledil Oy
Tehdaskatu 13
FIN-24100 SALO
Finland

DRAWN BY ah	DATE 20.7.2011	DRAWING TITLE Datasheet Lisa2-clip16-OSL series Assy		
CHECKED BY sn	DATE 20.7.2011	SIZE A4	DRAWING NUMBER	REV 2
DESIGNED BY hh	DATE 19.10.2009	SCALE 4:1	WEIGHT(g)	SHEET 1/1

See also our general installation guide: www.ledil.com/installation_guide

LEDiL is a registered trademark of LEDiL Oy in the European Union, USA, and certain other countries.

PHOTOMETRIC DATA (MEASURED):

OSRAM
Opto Semiconductors

LED	OSLON SSL 150
FWHM / FWTM	94.0°
Efficiency	70 %
Peak intensity	0.4 cd/lm
LEDs/each optic	1
Light colour	White

Required components:

LEDiL is a registered trademark of LEDiL Oy in the European Union, USA, and certain other countries.

PHOTOMETRIC DATA (SIMULATED):

LUMILEDS

LED	LUXEON IR Compact
FWHM / FWTM	91.0° / 140.0°
Efficiency	76 %
LEDs/each optic	1
Light colour	White
Required components:	

OSRAM
Opto Semiconductors

LED	SFH 4770S
FWHM / FWTM	55.0° / 99.0°
Efficiency	96 %
LEDs/each optic	1
Light colour	White
Required components:	

LEDiL is a registered trademark of LEDiL Oy in the European Union, USA, and certain other countries.

GENERAL INFORMATION:

NOTE: The typical beam angle will be changed by different color, chip size and chip position tolerance. The typical total beam angle is the full angle measured where the luminous intensity is half of the peak value.

MATERIALS:

As part of our continuous research and improvement processes, and to ensure the best possible quality and availability of our products, LEDiL reserves the right to change material grades without notice.

PRODUCT DATA USER AGREEMENT AND DISCLAIMER:

The measured data in the provided downloadable LEDiL Product Datasheets and Mechanical 2D-Drawings is rounded and provided as reference for planning. LEDiL Oy's optical specifications have been verified by conducting performance testing of the products in accordance with the company's quality system. The reported data are averaged results of multiple measurements with typical variation. LEDiL Oy reserves the right to without prior notification make changes and improvements to its products.

LEDiL Oy assumes neither warranty, nor guarantee nor any other liability of any kind for the contents and correctness of the provided data. The provided data has been generated with highest diligence but the provided data may in reality not represent the complete possible variation range of all intrinsic parameters. Therefore, in certain cases a deviation from the provided data could occur.

LEDiL Oy reserves the right to undertake technical changes of its products without further notification which could lead to changes in the provided data. LEDiL Oy assumes no liability of any kind for the possible deviation from any provided data or any other damage resulting from the usage of the provided data.

The user agrees to this disclaimer and user agreement with the download or usage of the provided files.

LEDiL Oy
Joensuunkatu 13
FI-24240 SALO
Finland

LEDiL Inc.
228 West Page Street
Suite D
Sycamore IL 60178
USA

Ledil Optics Technology (Shenzhen) Co., Ltd.
405 , Block B
Casic Motor Building
Shenzhen 518057
P.R.CHINA

Local sales and technical support
www.ledil.com/
where_to_buy

Shipping locations
Salo, Finland
Hong Kong, China

Distribution Partners
www.ledil.com/
where_to_buy

LEDiL is a registered trademark of LEDiL Oy in the European Union, USA, and certain other countries.