Crystal Clock Oscillator Specification

Part No. + Packaging: ***LFSPXO082286RL3K***

Customer Part:

Description

- 32.768kHz output crystal oscillator in a ceramic package, hermetically sealed with a seam sealed metal lid
  Suitable for real time clock applications
- Model CFPS-104
- Model Issue number 5

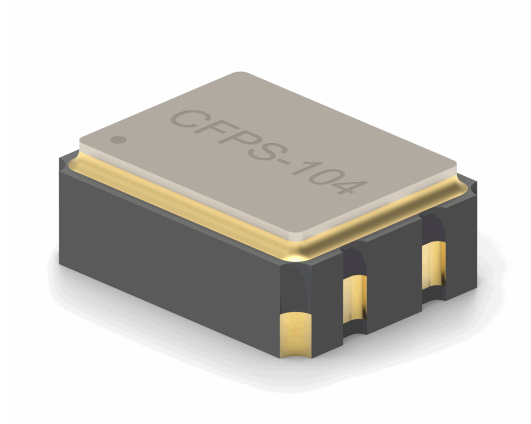

Frequency Parameters

- Frequency 32.7680kHz
- Frequency Stability ±100.00ppm
- Operating Temperature Range -40.00 to 125.00°C
- Ageing ±3ppm max per year

Electrical Parameters

- Supply Voltage 3.3V ±5%
- Current Draw 3.500mA

Output Details

- Output Compatibility CMOS
- Drive Capability 15pF max
- Rise and Fall Time 50.0ns max
- Duty Cycle 40/60%

Output Control

- Standby Operation:
  Logic '1' (>70% VS) to pad 1 enables oscillator output
  Logic '0' (<30% VS) to pad 1 disables oscillator output; when disabled the oscillator output goes to the high impedance state
  No connection to pad 1 enables oscillator output
- Start-up Time: 35ms max
  2ms typ to 90% of final amplitude (under ideal conditions @ 25°C)
- Standby Current: 20µA max, 1.7µA typ @ 25°C

Outline (mm)

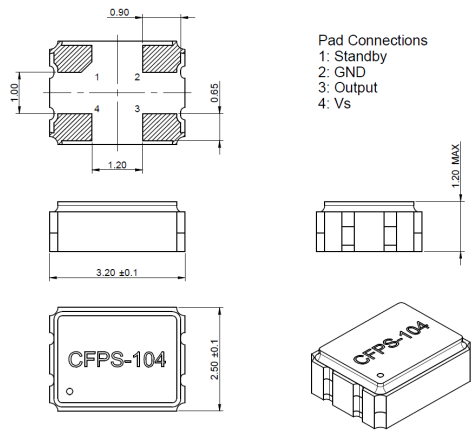

Environmental Parameters

- Storage Temperature Range: –55 to 125°C
- Shock: MIL-STD-883F, Method 2002.4: 1500G, 0.5ms, 3 times in each of 3 mutually perpendicular planes
- Vibration: MIL-STD-883F, Method 2007.3: 20G (20Hz-2000Hz), 1.52mm amplitude, 20mins in 3 mutually perpendicular planes (total 4hrs)

Test Circuit

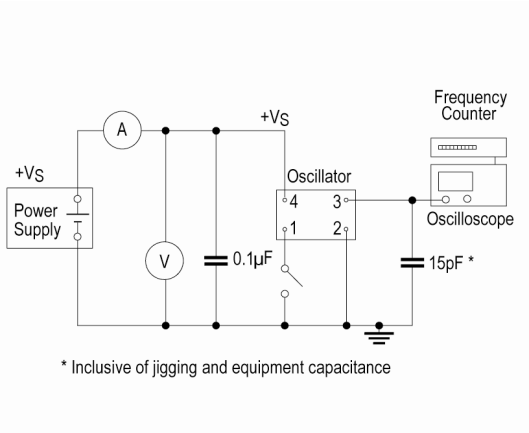

Compliance

- RoHS Status (2015/863/EU) Compliant
- REACh Status Compliant
- MSL Rating (JDEC-STD-033): Not Applicable

Packaging Details

- Pack Style: RL3K Tape & reel in accordance with EIA-481-D
  Pack Size: 3,000
- *Alternative packing option available*

Sales Office Contact Details:

UK: +44 (0)1460 270200 France: 0800 901 383 Email: info@iqdfrequencyproducts.com

Germany: 0800 1808 443 USA: +1.760.318.2824 Web: www.iqdfrequencyproducts.com

Customer Part:

Test Circuit

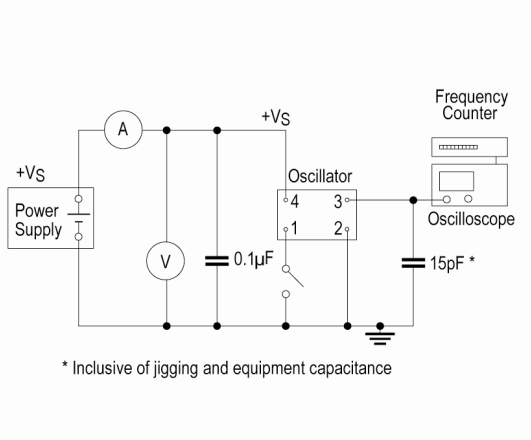
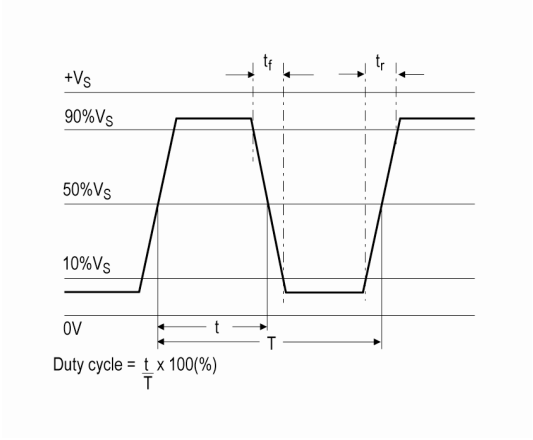
Wave Form