# ERT.00.250.CTL

## SUMMARY

### # Wires

| | |
|---|---|
| Coax | 1 |

*Image is for illustrative purpose only*

| | |
|---|---|
| Series | 00 |
| Termination type | Female solder |
| IP rating | 50 |
| AWG wire size | 0.00 - 0.00 |
| Cable Ø | 0.00 - 0.00 mm |
| Status | active |
| Matching parts | FFA.00.250.CTAC31 |

### Download

Request a quote

Catalog

## TECHNICAL DETAILS

### Mechanics

| | |
|---|---|
| Shell Style/Model | ERT*: Straight receptacle without thread, force or adhesive fit |
| Keying | Circular, female |
| Housing Material | Brass (chrome plated [SAE AMS 2460]) shell and collet nut, nickel plated [SAE AMS QQ N 290] brass latch sleeve and mid pieces |
| Weight | 2.13 g |

### Performance

| | |
|---|---|
| Configuration | 00.250 : 1 Coax (50 Ohm) |
| Insulator | T: PTFE |
| Rated Current | 4 Amps |

### Specifications

Contact Type: Coaxial 50 Ohm (Solder)
Contact Dia.: 0.7 mm (0.028in)
Bucket Dia.: 0.6 mm (0.024in)
Test voltage: 2.1 kV (rms)
R (max): 6.1 mOhm
Vtest: 2100 V (AC), 3000 V (DC)
▫
Impedance: 50 Ohm

*LEMO products and services are provided “as is”. LEMO makes no warranties or representations with regard to LEMO product & services or use of them, express, implied or statutory, including for accuracy, completeness, or security. The user is fully responsible for his products and applications using LEMO components.*

VSWR: 1.09 + 0.11 * f/GHz

### Others

Endurance (Shell): 5000 mating cycles
F ret (min): 100 N
Salt Spray Corrosion: >1000 hr

## DRAWINGS

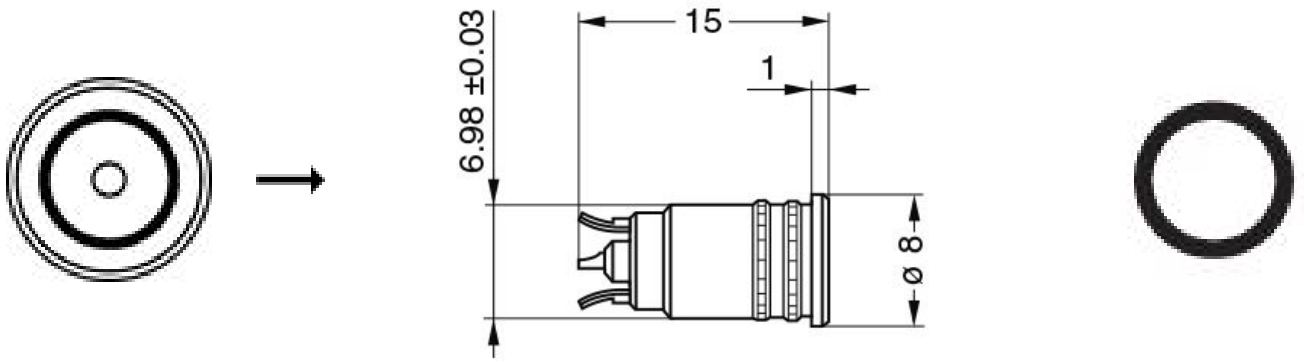


### Dimensions

| | A | L |
|---|---|---|
| mm. | 8 | 15 |
| in. | 0,31 | 0,59 |

## RECOMMENDED BY LEMO

### Tools

### Cables

| | | | |
|---|---|---|---|
| 159580 | PVC | Black | |
| 17420 | PVC | Black | |

*LEMO products and services are provided “as is”. LEMO makes no warranties or representations with regard to LEMO product & services or use of them, express, implied or statutory, including for accuracy, completeness, or security. The user is fully responsible for his products and applications using LEMO components.*

| | | | |
|---|---|---|---|
| 17450 | COPOLYMER | Black |  |
| 178190 | PTFE | Brown | |
| 18000 | PTFE | Brown | |
| 18700 | PTFE | White |  |
| 18800 | PTFE | White | |
| 196270 | PTFE | White | |
| 31600 | PTFE | Brown | |
| 62000 | PVC | Black | |
| CCX.50.030.083.180B | | White | |
| CCX.50.RG0.58AU14B | FEP | White | |
| CCX.50.RG1.74-U25N | PVC | Black | |
| CCX.50.RG1.74AU28N | PVC | Black | |
| CCX.50.RG1.74AU28N | PVC | Black | |
| CCX.50.RG1.74U25N | PVC | Black | |
| CCX.50.RG1.78BU18M | FEP | Brown | |
| CCX.50.RG1.78BU18M | PTFE | Brown | |
| CCX.50.RG1.88AU24B | TFE | White | |
| CCX.50.RG1.88AU26B | PFA | White | |
| CCX.50.RG1.88AU26B | PTFE | White | |
| CCX.50.RG1.96AU19B | PTFE | White | |
| CCX.50.RG1.96AU20B | PFA | White | |
| CCX.50.RG3.16BU26M | FEP | Brown | |
| CCX.50.RG3.16U28M | PTFE | Brown | |
| CCX.75.040.195327G | PVC | Grey | |
| CCX.75.RG0.59BU62N | PVC | Black | |
| CCX.75.RG1.79BU26M | FEP | Brown | |
| CCX.75.RG1.87AU26B | PFA | White | |
| CCX.75.RG1.87AU27B | PTFE | White |  |
| CCX.93.RG0.62AU62N | PVC | Black | |
| CCX.95.RG1.80BU36M | PTFE | Brown | |
| CCX.95.RG1.95AU37B | PFA | White | |

*LEMO products and services are provided “as is”. LEMO makes no warranties or representations with regard to LEMO product & services or use of them, express, implied or statutory, including for accuracy, completeness, or security. The user is fully responsible for his products and applications using LEMO components.*