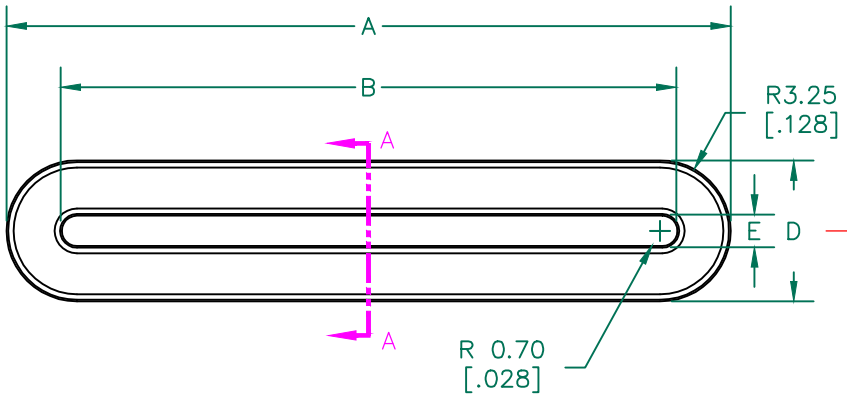

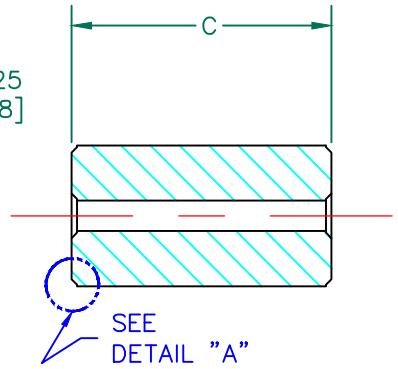

SECTION A–A

IMPEDANCE (Z)			
Frequency	25 MHz	100 MHz	300 MHz
Nominal (REF)	42 Ω	117 Ω	265 Ω
Minimum	- Ω	94 Ω	- Ω

Z vs. FREQUENCY
(REF. ONLY)

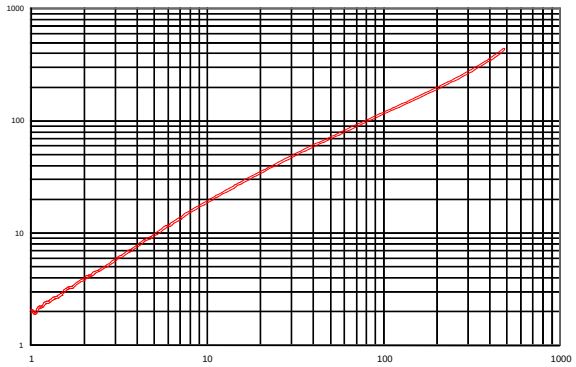

FREQUENCY (MHz)

AGILENT E4991A Impedance/Material Analyzer
HP 16092A-Test Fixture

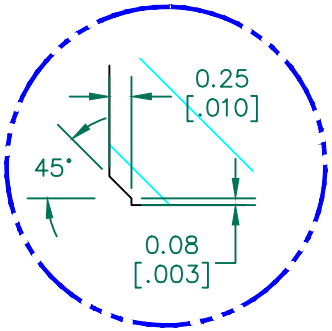

DETAIL "A"
CHAMFER
TYPICAL
SCALE=14:1

FERRITE CORE DIMENSIONS (SPEC): mm [in]

A	33.40 [1.315]	±	0.90 [.035]
B	28.40 [1.118]	±	0.90 [.035]
C	12.00 [.472]	±	0.50 [.020]
D	6.50 [.256]	±	0.50 [.020]
E	1.40 [.055]	±	0.30 [.012]

WEIGHT/1000 9.95 kgs [21.93 Lbs]

SCALE DRAWING 1:1

28R1315–100

DIMENSIONS ARE IN mm[INCHES].

REV	DESCRIPTION	DATE	INT
A	ORIGINAL DRAFT	02/20/13	Jcai

This print is the property of Laird Tech. and is loaned in confidence subject to return upon request and with the understanding that no copies shall be made without the written consent of Laird Tech. All rights to design or invention are reserved.

Laird

PROJECT/PART NUMBER:	REV	PART TYPE:	DRAWN BY:
28R1315–100	A	FERRITE RIBBON CORE	Jcai

DATE:	SCALE:	MATERIAL:
02/20/13	3 : 1	FERRITE

CAD #	TOOL #
28R1315–100–A	R1315