www.lemo.com

FGG.2B.308.CLAD62Z

SUMMARY

Wires

Low voltage	**8**



Image is for illustrative purpose only

Series	2B
Termination type	Male solder
IP rating	50
AWG wire size	30.00 - 22.00
Cable Ø	5.30 - 6.20 mm
Status	active
Matching parts	EGG.2B.308.CLL
	PHG.2B.308.CLLD62Z

Download

Request a quote

Eplan

Catalog

See video assembly instructions

TECHNICAL DETAILS

Mechanics

Shell Style/Model	FG*: Straight plug, cable collet and nut for fitting a bend relief
Keying	1 key (alpha=0, plug: male contacts, receptacle: female contacts)
Housing Material	Brass (chrome plated [SAE AMS 2460]) shell and collet nut, nickel plated [SAE AMS QQ N 290] brass latch sleeve and mid pieces
Variant	Z : Nut for fitting a bend relief
Weight	29.27 g

Performance

Configuration	2B.308 : 8 Low Voltage
Insulator	L: PEEK (UL 94 / V-0/1.5)
Rated Current	10 Amps

Specifications

Contact Type: Solder
Contact Dia.: 0.9 mm (0.035in)
Bucket Dia.: 0.8 mm (0.031in)
Max. Solid Conductor: 0.34 mm^2 (AWG 22)
Max. Stranded Conductor: 0.34 mm^2 (AWG 22)
R (max): 4.8 mOhm

LEMO products and services are provided “as is”. LEMO makes no warranties or representations with regard to LEMO product & services or use of them, express, implied or statutory, including for accuracy, completeness, or security. The user is fully responsible for his products and applications using LEMO components.

Vtest (contact-shell): 1250 V (AC), 1770 V (DC)
Vtest (contact-contact): 1500 V (AC), 2120 V (DC)

Others

Endurance (Shell): 5000
Temp (min / max): -55°C / +250°C
Humidity (max): <=95% [at 60 deg C /140 F]
Vibration: 15 g [10 Hz - 2000 Hz]
Shock Resistance: 100 g [6 ms]
Climatical Category: 50/175/21
Shielding (min): 75 dB (10 MHz)
Shielding (min): 40 dB (1 GHz)
Salt Spray Corrosion: >1000 hr

DRAWINGS

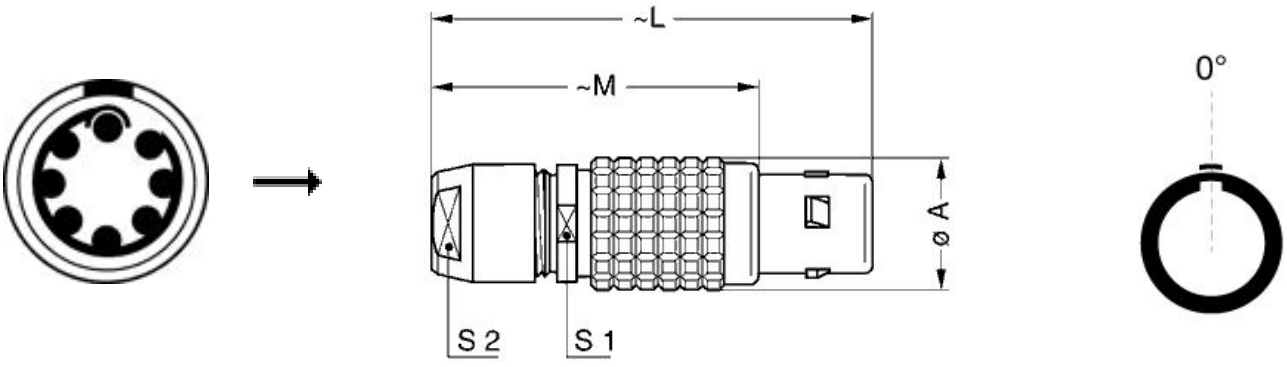

Dimensions

	A	L	M	S1	S2
mm.	15	49	37	13	12
in.	0,59	1,93	1,46	0,51	0,47

RECOMMENDED BY LEMO

Tools

LEMO products and services are provided “as is”. LEMO makes no warranties or representations with regard to LEMO product & services or use of them, express, implied or statutory, including for accuracy, completeness, or security. The user is fully responsible for his products and applications using LEMO components.

Spanner wrench: DCD.2B.025.PA120

Caps: BFG.2B.100.PCSG

Cables

CMN.08.T22.059QGC	TPR	Grey	
CMN.08.T22.059QGZE	TPR (medical)	Grey	
16080	PVC	Grey	
180240	PVC	Black	
180260	PVC	Black	
335991	PVC	Black	
42265	PVC	Yellow	
80140	PVC	Grey	

LEMO products and services are provided “as is”. LEMO makes no warranties or representations with regard to LEMO product & services or use of them, express, implied or statutory, including for accuracy, completeness, or security. The user is fully responsible for his products and applications using LEMO components.