www.lemo.com

PFN.2M.310.XLMT

SUMMARY

Wires

Low voltage	**10**



Image is for illustrative purpose only

Series	2M
Termination type	Female crimp
IP rating	68
AWG wire size	24.00 - 20.00
Cable Ø	6.50 - 13.00 mm
Status	active
Matching parts	FMN.2M.310.XLCT

Download

Request a quote

Catalog

TECHNICAL DETAILS

Mechanics

Shell Style/Model	PF*: Fixed receptacle with square flange, with mold stop
Keying	3 keys (beta=165, gamma=30, plug: male contacts, receptacle: female contacts)
Housing Material	Aluminium (nickel plated [SAE AMS QQ N 290], anthracite color) shell and nut, other pieces bronze/brass
Weight	11.21 g

Performance

Configuration	2M.310 : 10 Low Voltage
Insulator	L: PEEK
Rated Current	8 Amps

Specifications

Contact Type: Crimp
Contact Retention: 30 N
Contact Dia.: 0.9 mm (0.035in)
Bucket Dia.: 1.1 mm (0.043in)
Min. Conductor: 0.25 mm^2 (AWG 24)
Max. Conductor: 0.5 mm^2 (AWG 20)
R (max): 4.8 mOhm
Test voltage (kV rms) Contact-contact: 1.8

LEMO products and services are provided “as is”. LEMO makes no warranties or representations with regard to LEMO product & services or use of them, express, implied or statutory, including for accuracy, completeness, or security. The user is fully responsible for his products and applications using LEMO components.

Test voltage (kV rms) Contact-shell: 1.2

Others

Endurance (Shell): 3000 mating cycles
Temp (min / max): -20°C / +200°C
Humidity (max): 21 days at 95%
Gunfire vibration: 25 Hz - 2000 Hz, 3 axis (Apache helicopter)
Vibration-Sine: 30 g, 3 axes, 12 hr [10 Hz - 2000 Hz]
Vibration-Random: 37.8 g rms - 3 axes, 4 hr amb [50 Hz - 2000 Hz]
Shock Resistance: 300 g [3 ms]
Lighting strike EIA 364-75: 10K amps - 6 times
Thermal shock: 5 cycles: -65°C to +150°C
EMI Shielding EIA 364-66A: >= 80 dB (1 GHz), >=70 dB (3 GHz), >= 58 dB (6 GHz), >= 40 dB (10 GHz)
Salt Spray Corrosion: max. 48 hr

DRAWINGS

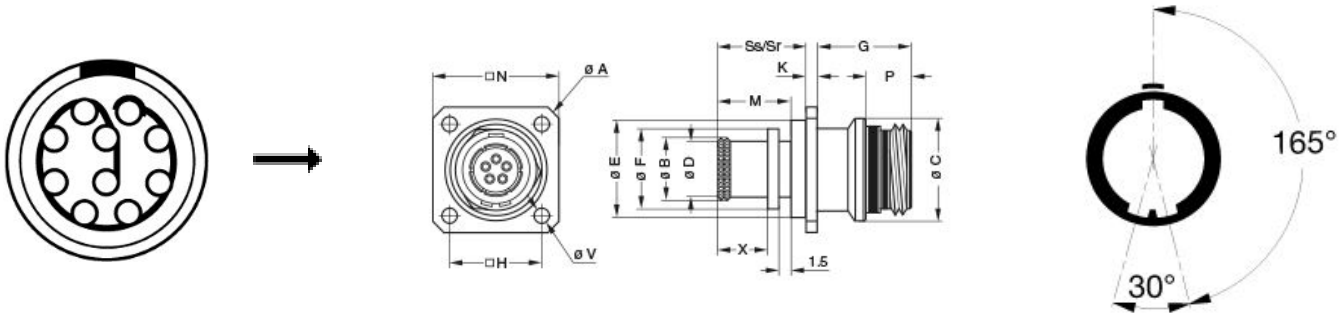

Dimensions

	A	B	C	D	E	F	G	H	K	N	Sr	Ss	V
mm.	26.9	14	17.2	13	15.5	15.5	12.8	15.1	1.5	20.6	11.7	11.7	3.3
in.	1,06	0,55	0,68	0,51	0,61	0,61	0,50	0,59	0,06	0,81	0,46	0,46	0,13

RECOMMENDED BY LEMO

LEMO products and services are provided “as is”. LEMO makes no warranties or representations with regard to LEMO product & services or use of them, express, implied or statutory, including for accuracy, completeness, or security. The user is fully responsible for his products and applications using LEMO components.

Tools

Crimp Tool:	DPC.91.701.V
Crimp settings:	AWG/Selector = 20-22-24/6-5-5
Positionner:	DCE.91.090.3MVM
Extractor:	DCF.93.090.4LT
Replacement contact:	EGN.0M.660.ZZM

LEMO products and services are provided “as is”. LEMO makes no warranties or representations with regard to LEMO product & services or use of them, express, implied or statutory, including for accuracy, completeness, or security. The user is fully responsible for his products and applications using LEMO components.