Product data sheet

RE21-SAC

RE2

NON-CONTACT SAFETY SWITCHES

SICK
Sensor Intelligence.

Ordering information

Type	Part no.
RE21-SAC	1059505

Other models and accessories → www.sick.com/RE2

Detailed technical data

Features

System part	Sensor with actuator
Sensor principle	Magnetic
Number of N/O contacts	1
Number of N/C contacts	1
Number of signaling contacts	0
Safe switch on distance S_{ao}	6 mm
Safe switch off distance S_{ar}	31 mm
Active sensor surfaces	1
Actuation directions	5

Safety-related parameters

B_{10d} parameter	2 x 10^7 switching cycles (with small load)
Type	Type 4 (EN ISO 14119)
Actuator coding level	Low coding level (EN ISO 14119)
Safe state in the event of a fault	The switch has no internal fault detection and is unable to assume a safe state in the event of a fault. Fault detection is performed by the connected safety-related logic unit.

Functions

Safe series connection	None, only individual wiring (with diagnostics)

Interfaces

Connection type	Plug connector, M8, 4-pin

Electrical data

Type of output	Reed contacts
Switching voltage	≤ 30 V DC
Switching current	≤ 400 mA

Mechanical data

Design	Rectangular
Dimensions (W x H x D)	25 mm x 88 mm x 13 mm
Weight	+ 0.1 kg

Housing material	Glass-fiber reinforced PPS

Ambient data

Enclosure rating	IP67 (IEC 60529)
Ambient operating temperature	–20 °C ... +60 °C
Storage temperature	–20 °C ... +60 °C
Vibration resistance	10 Hz ... 55 Hz, 1 mm (EN 60947-5-3)
Shock resistance	30 g, 11 ms (EN 60947-5-3)

Classifications

ECl@ss 5.0	27272402
ECl@ss 5.1.4	27272402
ECl@ss 6.0	27272402
ECl@ss 6.2	27272402
ECl@ss 7.0	27272402
ECl@ss 8.0	27272402
ECl@ss 8.1	27272402
ECl@ss 9.0	27272402
ECl@ss 10.0	27272402
ECl@ss 11.0	27272402
ETIM 5.0	EC002544
ETIM 6.0	EC002544
ETIM 7.0	EC002544
ETIM 8.0	EC002544
UNSPSC 16.0901	39122205

Dimensional drawing (Dimensions in mm (inch))

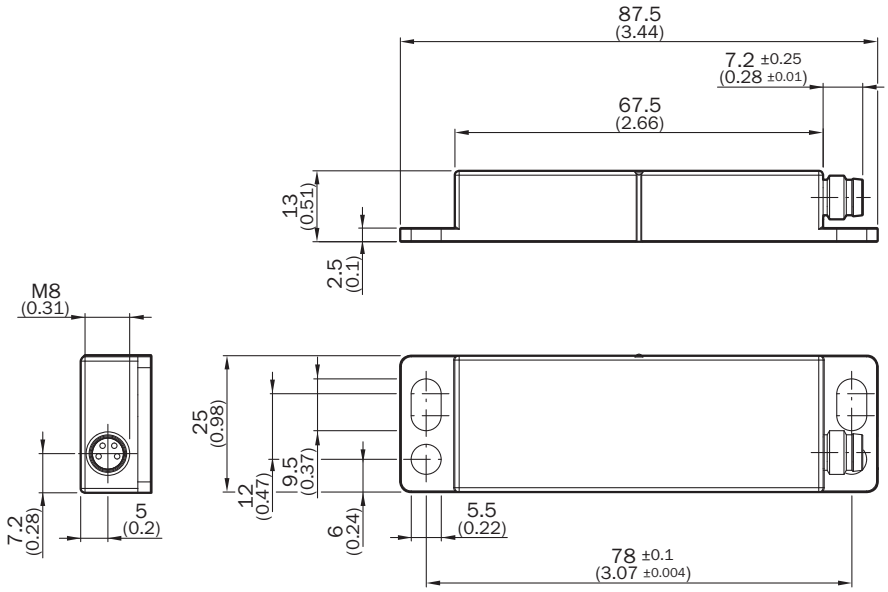

Response range

RE21

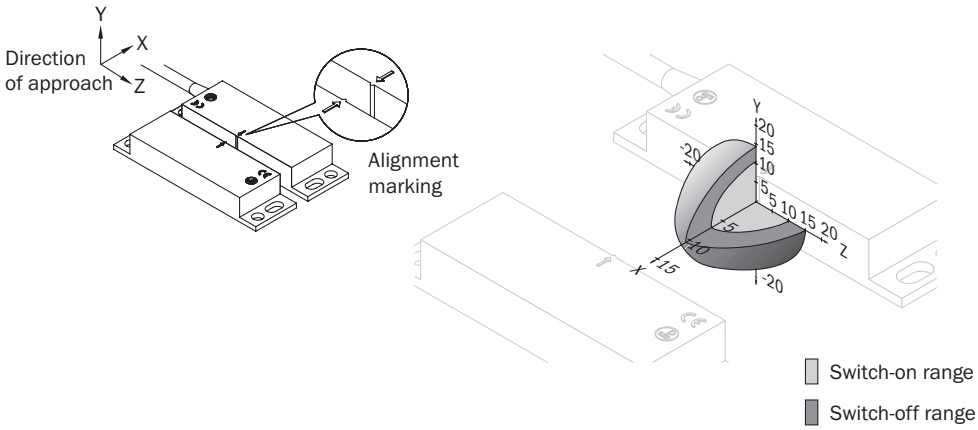

Pin assignment

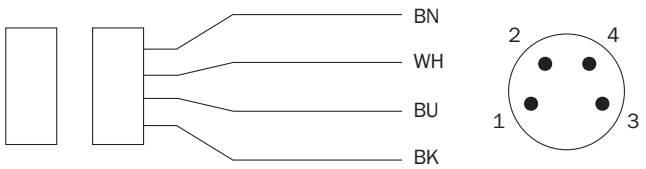

1 BN	N/O contact
2 WH	
3 BU	N/C contact
4 BK	

Sensor timing

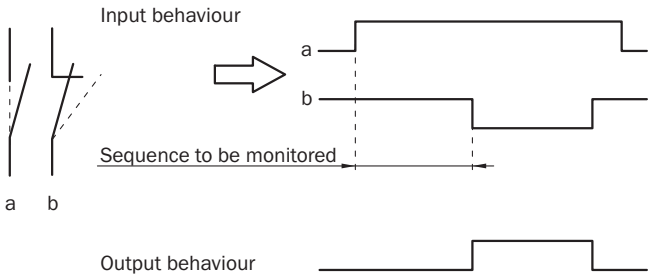

SICK AT A GLANCE

SICK is one of the leading manufacturers of intelligent sensors and sensor solutions for industrial applications. A unique range of products and services creates the perfect basis for controlling processes securely and efficiently, protecting individuals from accidents and preventing damage to the environment.

We have extensive experience in a wide range of industries and understand their processes and requirements. With intelligent sensors, we can deliver exactly what our customers need. In application centers in Europe, Asia and North America, system solutions are tested and optimized in accordance with customer specifications. All this makes us a reliable supplier and development partner.

Comprehensive services complete our offering: SICK LifeTime Services provide support throughout the machine life cycle and ensure safety and productivity.

For us, that is "Sensor Intelligence."

WORLDWIDE PRESENCE:

Contacts and other locations –www.sick.com

SICK
Sensor Intelligence.