Product data sheet

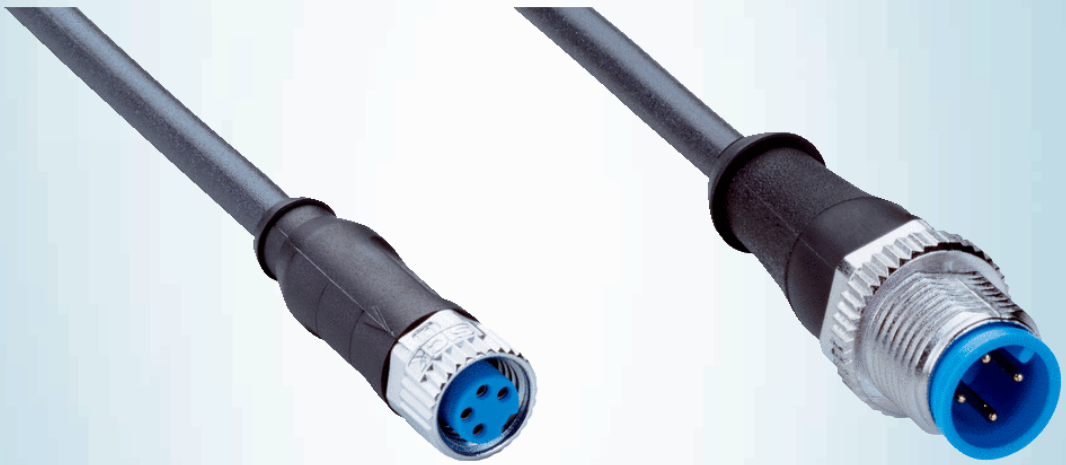

# YF8U14-C60UA3M2A14

SICK
Sensor Intelligence.



## Ordering information

| Type | Part no. |
|---|---|
| YF8U14-C60UA3M2A14 | 2096135 |

Other models and accessories ➜ www.sick.com/

c UL us LISTED CYJV Cable Assembly

## Detailed technical data

### Technical specifications

| | |
|---|---|
| **Accessory group** | Plug connectors and cables |
| **Accessory family** | Connection cables |
| **Connection type head A** | Female connector, M8, 4-pin, straight, A-coded |
| **Connection type head B** | Male connector, M12, 4-pin, straight, A-coded |
| **Locking plug connector** | Screw connection |
| **Connector material** | TPU |
| **Connector color** | Black |
| **Locking nut material** | Zinc die-cast, nickel-plated |
| **Seal material** | FKM |
| **Tightening torque** | 0.4 Nm (M8), 0.6 Nm (M12) |
| **Width across flats** | 9 (M8), 13 (M12) |
| **Cable** | 0.6 m, 4-wire, PUR, halogen-free |
| **Jacket material** | PUR, halogen-free |
| **Jacket color** | Black |
| **Cable diameter** | 4.5 mm |
| **Conductor cross-section** | 0.25 mm² |
| **Shielding** | Unshielded |
| **Bending radius** | |
| Flexible use | > 10 x cable diameter |
| Stationary position | > 5 x cable diameter |
| Drag chain operation | > 10 x cable diameter |
| **Bending cycles** | 10,000,000 |
| **Reference voltage** | ≤ 60 V AC/DC |
| **Rated impulse voltage** | 1.5 kV |
| **Current loading** | 4 A |
| **Traversing speed** | 3 m/s |
| **Travelling distance** | 10 m |
| **Acceleration** | ≤ 10 m/s² |
| **Signal type** | Sensor/actuator cable |
| **Torsion force** | 180° / 1 m |

| | |
|---|---|
| **Torsion cycles** | 2,000,000 |
| **Cycles per minutes** | 35 |
| **Application** | Zones with oils and lubricants<br>Drag chain operation<br>Robot |
| **Authorizations** | UL |
| **UL File No.** | E335179 |
| **Enclosure rating** | IP65 / IP66K / IP67 |
| **Ambient operating temperature** | |
| Flexible use | –25 °C ... +80 °C |
| Stationary position | –40 °C ... +80 °C |
| Drag chain operation | –25 °C ... +80 °C |
| Head | –25 °C ... +85 °C |
| **Contamination rating** | 3 |
| **Insulation resistance** | 100 MΩ |
| **Overvoltage category** | III |
| **Specific insulation resistance** | 30 mΩ |
| **Thermal resistance, cable** | Flame retardant according to UL 1581, horizontal flame test/CSA FT2 / IEC 60332-1, IEC 60332-2-2 |

## Classifications

| | |
|---|---|
| **ECl@ss 5.0** | 19030312 |
| **ECl@ss 5.1.4** | 19030312 |
| **ECl@ss 6.0** | 27060304 |
| **ECl@ss 6.2** | 27060304 |
| **ECl@ss 7.0** | 27060304 |
| **ECl@ss 8.0** | 27060304 |
| **ECl@ss 8.1** | 27060304 |
| **ECl@ss 9.0** | 27060304 |
| **ECl@ss 10.0** | 27060304 |
| **ECl@ss 11.0** | 27060304 |
| **ETIM 5.0** | EC000830 |
| **ETIM 6.0** | EC000830 |
| **ETIM 7.0** | EC003249 |
| **ETIM 8.0** | EC003249 |
| **UNSPSC 16.0901** | 26121604 |

## Dimensional drawing (Dimensions in mm (inch))

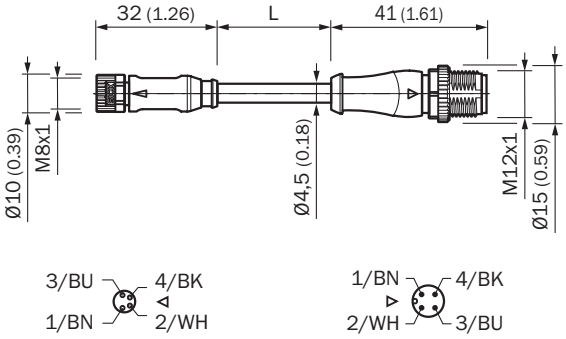








## Recommended accessories

Other models and accessories ➜ www.sick.com/

| | Brief description | Type | Part no. |
|---|---|---|---|
| Other mounting accessories | | | |
|  | 1 piece, M8 mounting key set for SW9 with calibrated torque 0.4 Nm | TOOL-TW04M08AF09 | 5337207 |
| | 1 piece, M12 mounting key set for SW13 with calibrated torque 0.6 Nm | TOOL-TW06M12AF13 | 5337208 |

# SICK AT A GLANCE

SICK is one of the leading manufacturers of intelligent sensors and sensor solutions for industrial applications. A unique range of products and services creates the perfect basis for controlling processes securely and efficiently, protecting individuals from accidents and preventing damage to the environment.

We have extensive experience in a wide range of industries and understand their processes and requirements. With intelligent sensors, we can deliver exactly what our customers need. In application centers in Europe, Asia and North America, system solutions are tested and optimized in accordance with customer specifications. All this makes us a reliable supplier and development partner.

Comprehensive services complete our offering: SICK LifeTime Services provide support throughout the machine life cycle and ensure safety and productivity.

**For us, that is “Sensor Intelligence.”**

# WORLDWIDE PRESENCE:

Contacts and other locations –www.sick.com