Power MOSFET

TO-220 FULLPAK

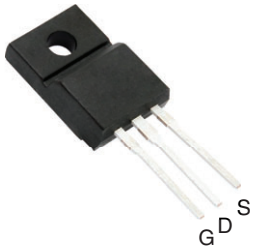

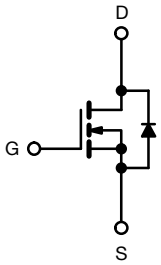

N-Channel MOSFET

FEATURES

- Isolated package
- High voltage isolation = 2.5 kV_{RMS} (t = 60 s; f = 60 Hz)
- Sink to lead creepage distance = 4.8 mm
- 175 °C operating temperature
- Dynamic dV/dt rating
- Low thermal resistance
- Material categorization: for definitions of compliance please see www.vishay.com/doc?99912

RoHS COMPLIANT

PRODUCT SUMMARY		
V_{DS} (V)	60	
$R_{DS(on)}$ (Ω)	V_{GS} = 10 V	0.050
Q_g (Max.) (nC)	46	
Q_{gs} (nC)	11	
Q_{gd} (nC)	22	
Configuration	Single	

DESCRIPTION

Third generation power MOSFETs from Vishay provides the designer with the best combination of fast switching, ruggedized device design, low on-resistance and cost effectiveness.

The TO-220 FULLPAK eliminates the need for additional insulating hardware in commercial-industrial applications. The molding compound used provides a high isolation capability and a low thermal resistance between the tab and external heatsink. This isolation is equivalent to using a 100 micron mica barrier with standard TO-220 product. The FULLPAK is mounted to a heatsink using a single clip or by a single screw fixing.

ORDERING INFORMATION	
Package	TO-220 FULLPAK
Lead (Pb)-free	IRFIZ34GPbF

ABSOLUTE MAXIMUM RATINGS T_C = 25 °C, unless otherwise noted

PARAMETER			SYMBOL	LIMIT	UNIT
Drain-source voltage			V_{DS}	60	V
Gate-source voltage			V_{GS}	± 20	
Continuous drain current	V_{GS} at 10 V	T_C = 25 °C	I_D	20	A
		T_C = 100 °C		14	
Pulsed drain current [a]			I_{DM}	80	
Linear derating factor				0.28	W/°C
Single pulse avalanche energy [b]			E_{AS}	300	mJ
Maximum power dissipation	T_C = 25 °C		P_D	42	W
Peak diode recovery dV/dt [c]			dV/dt	5.0	V/ns
Operating junction and storage temperature range			T_J, T_{stg}	-55 to +175	°C
Soldering recommendations (peak temperature) [d]	For 10 s			300	
Mounting torque	M3 screw			0.6	Nm

Notes

a. Repetitive rating; pulse width limited by maximum junction temperature (see fig. 11)
b. V_{DD} = 25 V, starting T_J = 25 °C, L = 875 μH, R_G = 25 Ω, I_{AS} = 20 A (see fig. 12)
c. $I_{SD} \leq$ 30 A, dI/dt ≤ 200 A/μs, $V_{DD} \leq V_{DS}$, $T_J \leq$ 175 °C
d. 1.6 mm from case

For technical questions, contact: hvmos.techsupport@vishay.com
THIS DOCUMENT IS SUBJECT TO CHANGE WITHOUT NOTICE. THE PRODUCTS DESCRIBED HEREIN AND THIS DOCUMENT ARE SUBJECT TO SPECIFIC DISCLAIMERS, SET FORTH AT www.vishay.com/doc?91000

THERMAL RESISTANCE RATINGS				
PARAMETER	**SYMBOL**	**TYP.**	**MAX.**	**UNIT**
Maximum junction-to-ambient	R_{thJA}	-	65	°C/W
Maximum junction-to-case (drain)	R_{thJC}	-	3.6	

SPECIFICATIONS T_J = 25 °C, unless otherwise noted							
PARAMETER	**SYMBOL**	**TEST CONDITIONS**		**MIN.**	**TYP.**	**MAX.**	**UNIT**
Static							
Drain-ssource breakdown voltage	V_{DS}	V_{GS} = 0 V, I_D = 250 μA		60	-	-	V
V_{DS} temperature coefficient	$\Delta V_{DS}/T_J$	Reference to 25 °C, I_D = 1 mA		-	0.065	-	V/°C
Gate-source threshold voltage	$V_{GS(th)}$	V_{DS} = V_{GS}, I_D = 250 μA		2.0	-	4.0	V
Gate-source leakage	I_{GSS}	V_{GS} = ± 20 V		-	-	± 100	nA
Zero gate voltage drain current	I_{DSS}	V_{DS} = 60 V, V_{GS} = 0 V		-	-	25	μA
		V_{DS} = 48 V, V_{GS} = 0 V, T_J = 150 °C		-	-	250	
Drain-source on-state resistance	$R_{DS(on)}$	V_{GS} = 10 V	I_D = 12 A [b]	-	-	0.050	Ω
Forward transconductance	g_{fs}	V_{DS} = 25 V, I_D = 12 A [b]		9.2	-	-	S
Dynamic							
Input capacitance	C_{iss}	V_{GS} = 0 V, V_{DS} = 25 V, f = 1.0 MHz, see fig. 5		-	1200	-	pF
Output capacitance	C_{oss}			-	600	-	
Reverse transfer capacitance	C_{rss}			-	100	-	
Drain to sink capacitance	C	f = 1.0 MHz		-	12	-	
Total gate charge	Q_g	V_{GS} = 10 V	I_D = 30 A, V_{DS} = 48 V see fig. 6 and 13 [b]	-	-	46	nC
Gate-source charge	Q_{gs}			-	-	11	
Gate-drain charge	Q_{gd}			-	-	22	
Turn-on delay time	$t_{d(on)}$	V_{DD} = 30 V, I_D = 30 A R_G = 12 Ω, R_D= 1.0 Ω, see fig. 10 [b]		-	13	-	ns
Rise time	t_r			-	100	-	
Turn-off delay time	$t_{d(off)}$			-	29	-	
Fall time	t_f			-	52	-	
Internal drain inductance	L_D	Between lead, 6 mm (0.25") from package and center of die contact	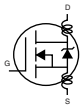	-	4.5	-	nH
Internal source inductance	L_S			-	7.5	-	
Drain-Source Body Diode Characteristics							
Continuous source-drain diode current	I_S	MOSFET symbol showing the integral reverse p - n junction diode		-	-	20	A
Pulsed diode forward current [a]	I_{SM}			-	-	80	
Body diode voltage	V_{SD}	T_J = 25 °C, I_S = 20 A, V_{GS} = 0 V [b]		-	-	1.6	V
Body diode reverse recovery time	t_{rr}	T_J = 25 °C, I_F = 30 A, dI/dt = 100 A/μs [b]		-	120	230	ns
Body diode reverse recovery charge	Q_{rr}			-	0.70	1.4	μC
Forward turn-on time	t_{on}	Intrinsic turn-on time is negligible (turn-on is dominated by L_S and L_D)					

Notes

a. Repetitive rating; pulse width limited by maximum junction temperature (see fig. 11)

b. Pulse width ≤ 300 μs; duty cycle ≤ 2 %

For technical questions, contact: hvmos.techsupport@vishay.com
THIS DOCUMENT IS SUBJECT TO CHANGE WITHOUT NOTICE. THE PRODUCTS DESCRIBED HEREIN AND THIS DOCUMENT ARE SUBJECT TO SPECIFIC DISCLAIMERS, SET FORTH AT www.vishay.com/doc?91000

TYPICAL CHARACTERISTICS 25 °C, unless otherwise noted

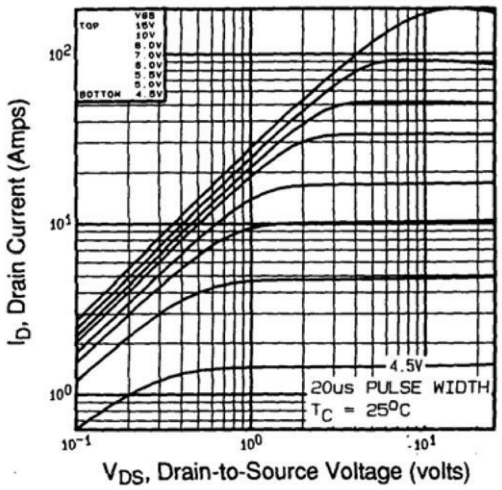

Fig. 1 - Typical Output Characteristics, T_C = 25 °C

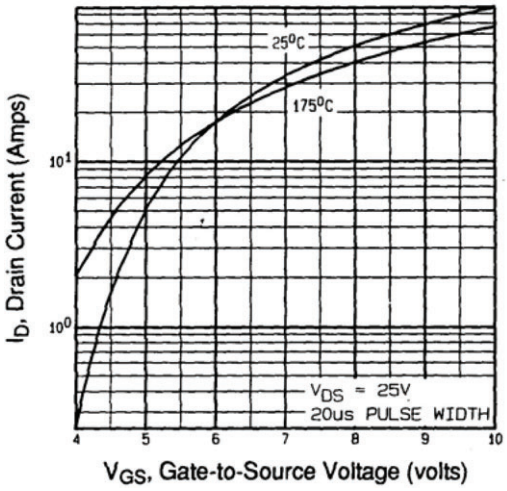

Fig. 3 - Typical Transfer Characteristics

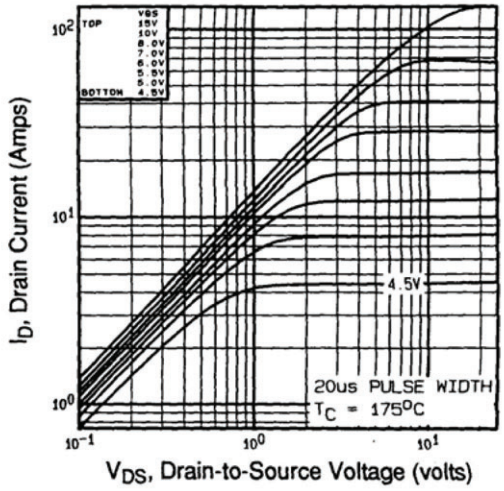

Fig. 2 - Typical Output Characteristics, T_C = 175 °C

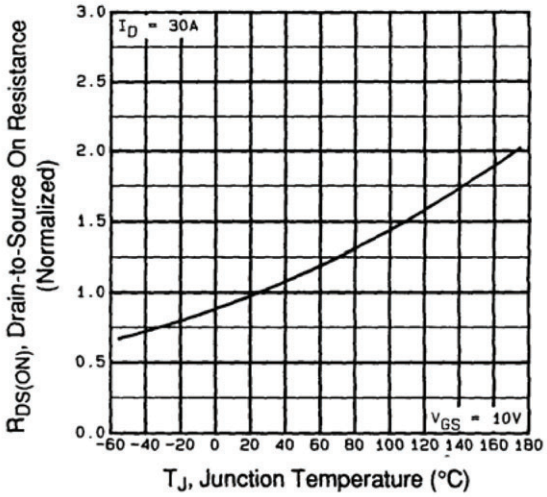

Fig. 4 - Normalized On-Resistance vs. Temperature

For technical questions, contact: hvmos.techsupport@vishay.com
THIS DOCUMENT IS SUBJECT TO CHANGE WITHOUT NOTICE. THE PRODUCTS DESCRIBED HEREIN AND THIS DOCUMENT ARE SUBJECT TO SPECIFIC DISCLAIMERS, SET FORTH AT www.vishay.com/doc?91000

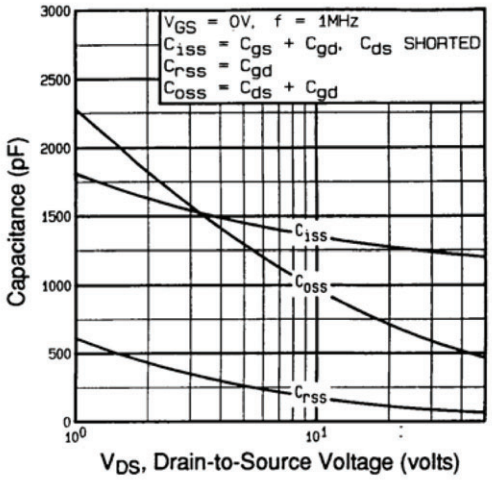

Fig. 5 - Typical Capacitance vs. Drain-to-Source Voltage

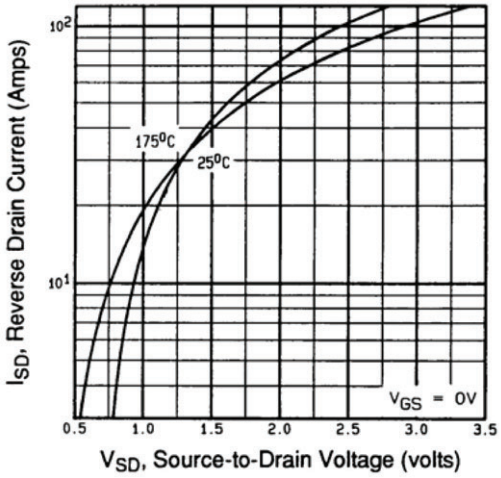

Fig. 7 - Typical Source-Drain Diode Forward Voltage

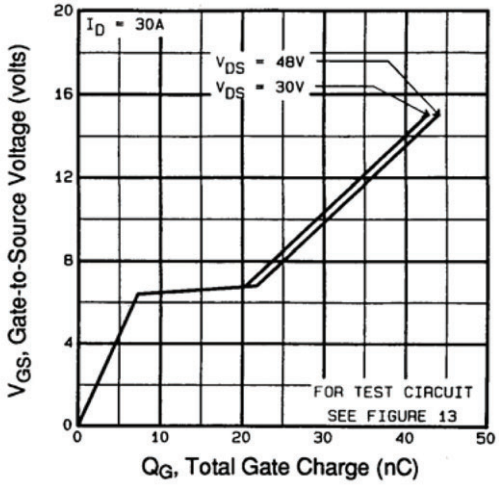

Fig. 6 - Typical Gate Charge vs. Gate-to-Source Voltage

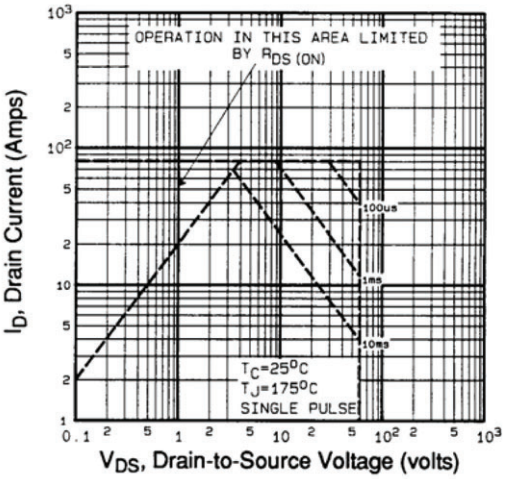

Fig. 8 - Maximum Safe Operating Area

For technical questions, contact: hvmos.techsupport@vishay.com
THIS DOCUMENT IS SUBJECT TO CHANGE WITHOUT NOTICE. THE PRODUCTS DESCRIBED HEREIN AND THIS DOCUMENT ARE SUBJECT TO SPECIFIC DISCLAIMERS, SET FORTH AT www.vishay.com/doc?91000

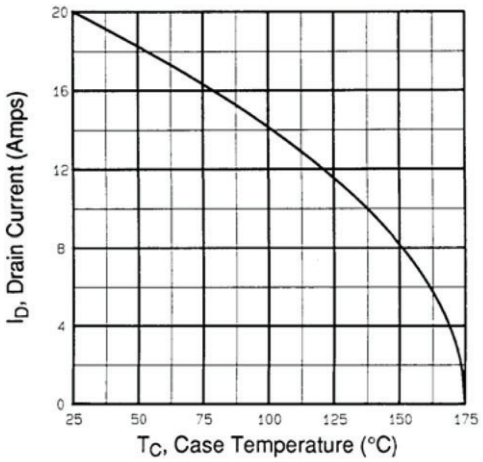

Fig. 9 - Maximum Drain Current vs. Case Temperature

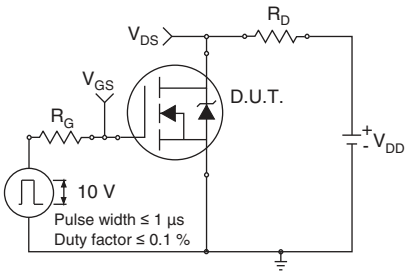

Fig. 10a - Switching Time Test Circuit

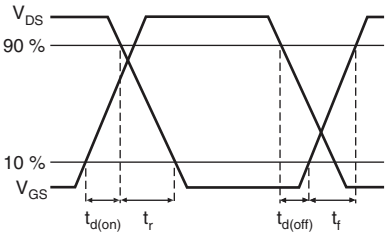

Fig. 10b - Switching Time Waveforms

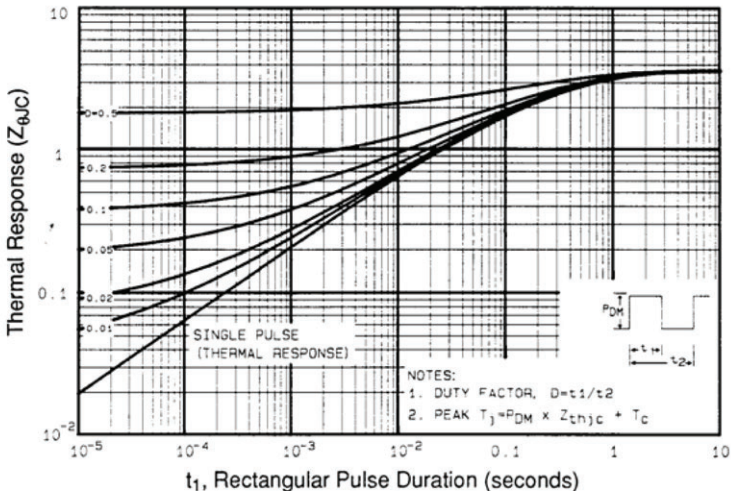

Fig. 11 - Maximum Effective Transient Thermal Impedance, Junction-to-Case

For technical questions, contact: hvmos.techsupport@vishay.com
THIS DOCUMENT IS SUBJECT TO CHANGE WITHOUT NOTICE. THE PRODUCTS DESCRIBED HEREIN AND THIS DOCUMENT ARE SUBJECT TO SPECIFIC DISCLAIMERS, SET FORTH AT www.vishay.com/doc?91000

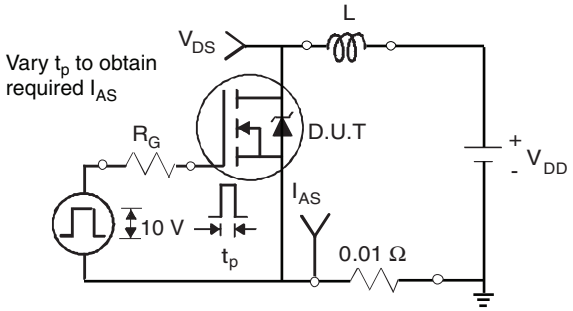

Fig. 12a - Unclamped Inductive Test Circuit

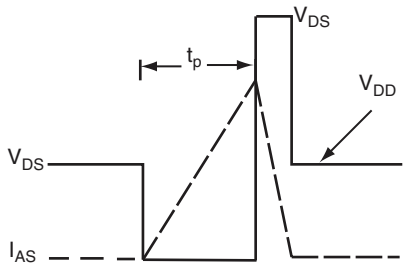

Fig. 12b - Unclamped Inductive Waveforms

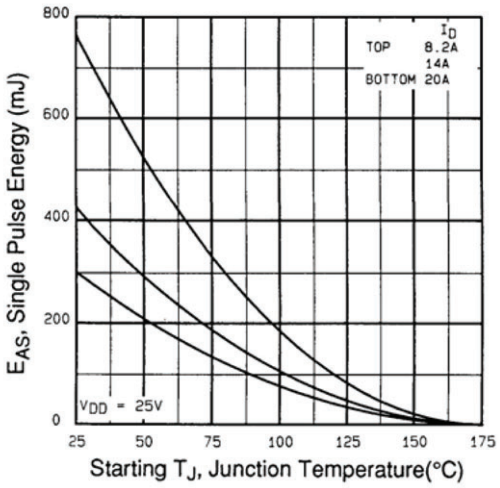

Fig. 12c - Maximum Avalanche Energy vs. Drain Current

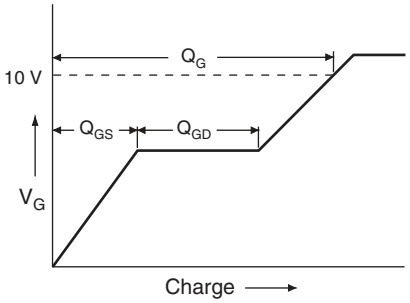

Fig. 13a - Basic Gate Charge Waveform

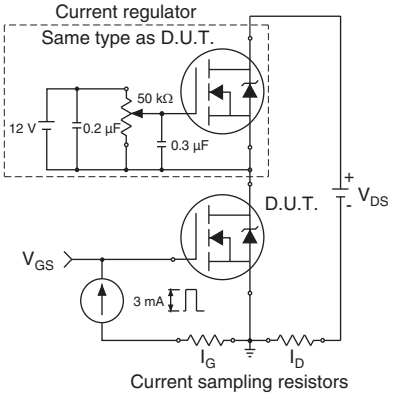

Fig. 13b - Gate Charge Test Circuit

For technical questions, contact: hvmos.techsupport@vishay.com
THIS DOCUMENT IS SUBJECT TO CHANGE WITHOUT NOTICE. THE PRODUCTS DESCRIBED HEREIN AND THIS DOCUMENT ARE SUBJECT TO SPECIFIC DISCLAIMERS, SET FORTH AT www.vishay.com/doc?91000

Peak Diode Recovery dV/dt Test Circuit

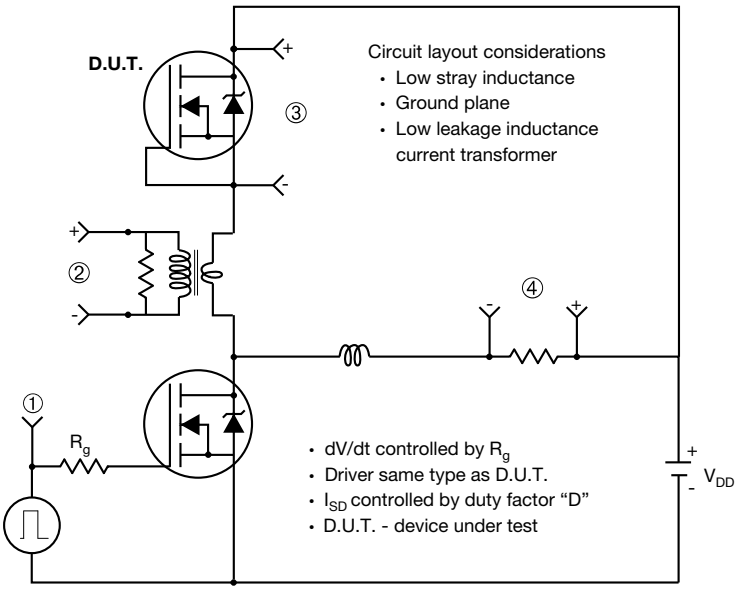

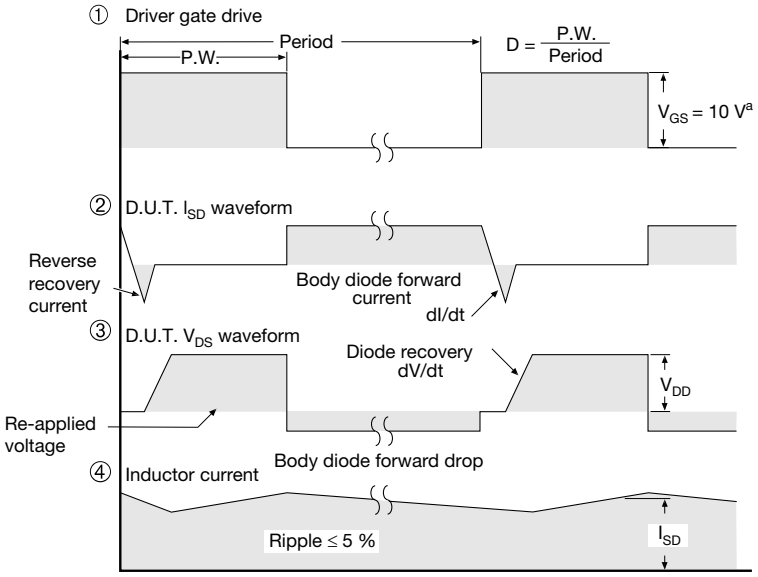

Note

a. V_{GS} = 5 V for logic level devices

Fig. 14 - For N-Channel

Vishay Siliconix maintains worldwide manufacturing capability. Products may be manufactured at one of several qualified locations. Reliability data for Silicon Technology and Package Reliability represent a composite of all qualified locations. For related documents such as package/tape drawings, part marking, and reliability data, see www.vishay.com/ppg?91188.

For technical questions, contact: hvmos.techsupport@vishay.com
THIS DOCUMENT IS SUBJECT TO CHANGE WITHOUT NOTICE. THE PRODUCTS DESCRIBED HEREIN AND THIS DOCUMENT ARE SUBJECT TO SPECIFIC DISCLAIMERS, SET FORTH AT www.vishay.com/doc?91000

TO-220 FULLPAK (High Voltage)

OPTION 1: FACILITY CODE = 9

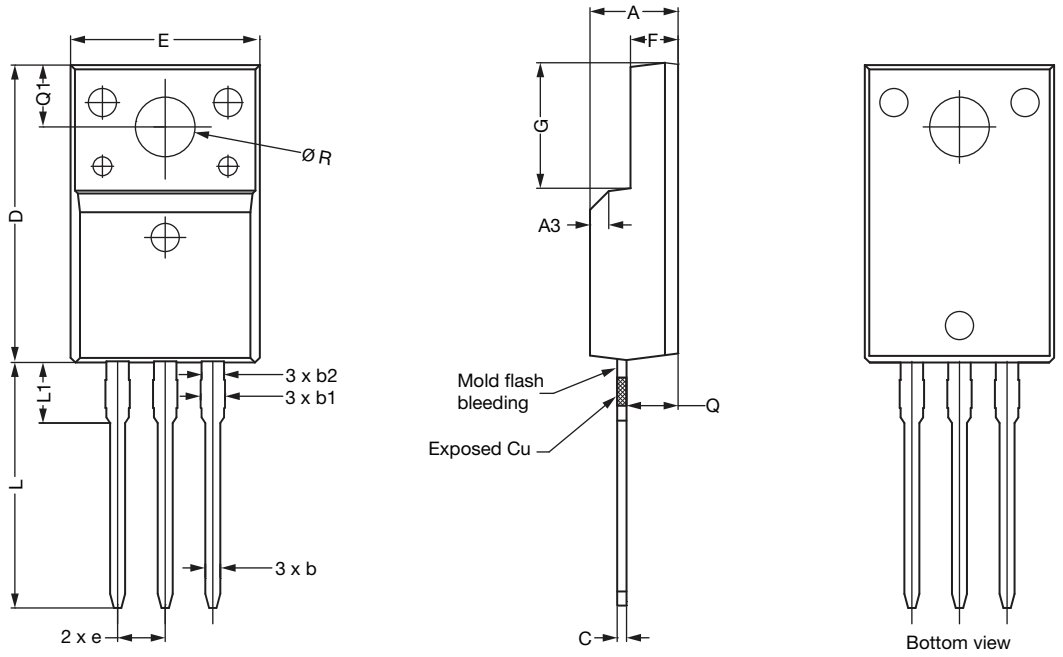

	MILLIMETERS		
DIM.	MIN.	NOM.	MAX.
A	4.60	4.70	4.80
b	0.70	0.80	0.91
b1	1.20	1.30	1.47
b2	1.10	1.20	1.30
C	0.45	0.50	0.63
D	15.80	15.87	15.97
e	2.54 BSC		
E	10.00	10.10	10.30
F	2.44	2.54	2.64
G	6.50	6.70	6.90
L	12.90	13.10	13.30
L1	3.13	3.23	3.33
Q	2.65	2.75	2.85
Q1	3.20	3.30	3.40
Ø R	3.08	3.18	3.28

Notes

1. To be used only for process drawing
2. These dimensions apply to all TO-220 FULLPAK leadframe versions 3 leads
3. All critical dimensions should C meet $C_{pk} > 1.33$
4. All dimensions include burrs and plating thickness
5. No chipping or package damage
6. Facility code will be the 1st character located at the 2nd row of the unit marking

For technical questions, contact: hvmos.techsupport@vishay.com

THIS DOCUMENT IS SUBJECT TO CHANGE WITHOUT NOTICE. THE PRODUCTS DESCRIBED HEREIN AND THIS DOCUMENT ARE SUBJECT TO SPECIFIC DISCLAIMERS, SET FORTH AT www.vishay.com/doc?91000

OPTION 2: FACILITY CODE = Y

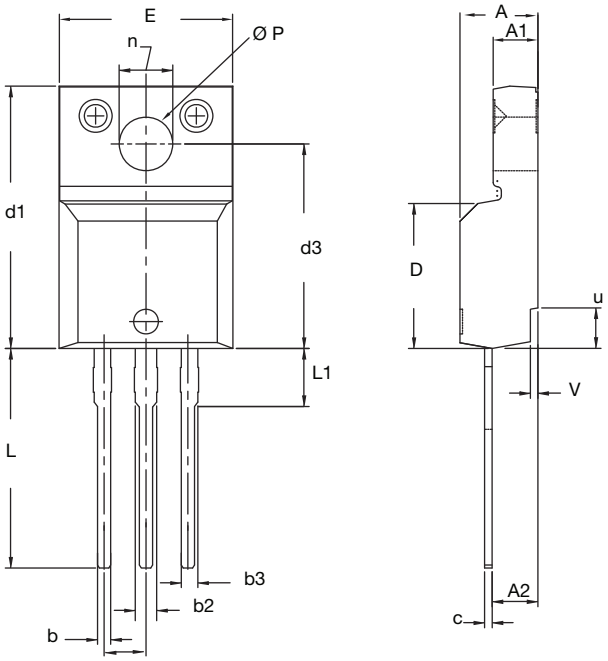

	MILLIMETERS		INCHES	
DIM.	MIN.	MAX.	MIN.	MAX.
A	4.570	4.830	0.180	0.190
A1	2.570	2.830	0.101	0.111
A2	2.510	2.850	0.099	0.112
b	0.622	0.890	0.024	0.035
b2	1.229	1.400	0.048	0.055
b3	1.229	1.400	0.048	0.055
c	0.440	0.629	0.017	0.025
D	8.650	9.800	0.341	0.386
d1	15.88	16.120	0.622	0.635
d3	12.300	12.920	0.484	0.509
E	10.360	10.630	0.408	0.419
e	2.54 BSC		0.100 BSC	
L	13.200	13.730	0.520	0.541
L1	3.100	3.500	0.122	0.138
n	6.050	6.150	0.238	0.242
Ø P	3.050	3.450	0.120	0.136
u	2.400	2.500	0.094	0.098
V	0.400	0.500	0.016	0.020
ECN: E19-0180-Rev. D, 08-Apr-2019 DWG: 5972				

Notes

1. To be used only for process drawing
2. These dimensions apply to all TO-220 FULLPAK leadframe versions 3 leads
3. All critical dimensions should C meet $C_{pk} > 1.33$
4. All dimensions include burrs and plating thickness
5. No chipping or package damage
6. Facility code will be the 1st character located at the 2nd row of the unit marking

For technical questions, contact: hvmos.techsupport@vishay.com

THIS DOCUMENT IS SUBJECT TO CHANGE WITHOUT NOTICE. THE PRODUCTS DESCRIBED HEREIN AND THIS DOCUMENT ARE SUBJECT TO SPECIFIC DISCLAIMERS, SET FORTH AT www.vishay.com/doc?91000

Disclaimer

ALL PRODUCT, PRODUCT SPECIFICATIONS AND DATA ARE SUBJECT TO CHANGE WITHOUT NOTICE TO IMPROVE RELIABILITY, FUNCTION OR DESIGN OR OTHERWISE.

Vishay Intertechnology, Inc., its affiliates, agents, and employees, and all persons acting on its or their behalf (collectively, “Vishay”), disclaim any and all liability for any errors, inaccuracies or incompleteness contained in any datasheet or in any other disclosure relating to any product.

Vishay makes no warranty, representation or guarantee regarding the suitability of the products for any particular purpose or the continuing production of any product. To the maximum extent permitted by applicable law, Vishay disclaims (i) any and all liability arising out of the application or use of any product, (ii) any and all liability, including without limitation special, consequential or incidental damages, and (iii) any and all implied warranties, including warranties of fitness for particular purpose, non-infringement and merchantability.

Statements regarding the suitability of products for certain types of applications are based on Vishay's knowledge of typical requirements that are often placed on Vishay products in generic applications. Such statements are not binding statements about the suitability of products for a particular application. It is the customer's responsibility to validate that a particular product with the properties described in the product specification is suitable for use in a particular application. Parameters provided in datasheets and / or specifications may vary in different applications and performance may vary over time. All operating parameters, including typical parameters, must be validated for each customer application by the customer's technical experts. Product specifications do not expand or otherwise modify Vishay's terms and conditions of purchase, including but not limited to the warranty expressed therein.

Hyperlinks included in this datasheet may direct users to third-party websites. These links are provided as a convenience and for informational purposes only. Inclusion of these hyperlinks does not constitute an endorsement or an approval by Vishay of any of the products, services or opinions of the corporation, organization or individual associated with the third-party website. Vishay disclaims any and all liability and bears no responsibility for the accuracy, legality or content of the third-party website or for that of subsequent links.

Except as expressly indicated in writing, Vishay products are not designed for use in medical, life-saving, or life-sustaining applications or for any other application in which the failure of the Vishay product could result in personal injury or death. Customers using or selling Vishay products not expressly indicated for use in such applications do so at their own risk. Please contact authorized Vishay personnel to obtain written terms and conditions regarding products designed for such applications.

No license, express or implied, by estoppel or otherwise, to any intellectual property rights is granted by this document or by any conduct of Vishay. Product names and markings noted herein may be trademarks of their respective owners.

© 2022 VISHAY INTERTECHNOLOGY, INC. ALL RIGHTS RESERVED