Product data sheet




# MRS1104C-011010

## MRS1000

3D LIDAR SENSORS

SICK
Sensor Intelligence.




## Ordering information

| Type | Part no. |
|---|---|
| MRS1104C-011010 | 1075367 |

Other models and accessories ➜ www.sick.com/MRS1000

## Detailed technical data

### Features

| | |
|---|---|
| **Measurement principle** | HDDM$^+$ |
| **Application** | Indoor |
| **Light source** | Infrared (850 nm) |
| **Laser class** | 1 (IEC 60825-1:2014, EN 60825-1:2014) |
| **Aperture angle** | |
| Horizontal | 275° |
| Vertical | 7.5° (Over 4 scan planes) |
| **Scanning frequency** | 50 Hz, 4 x 12.5 Hz |
| **Angular resolution** | 0.25°<br>0.125°, interlaced<br>0.0625°, interlaced |
| **Heating** | Self-heating |
| **Working range** | 0.2 m ... 64 m |
| **Scanning range** | |
| At 10% remission | 16 m |
| At 90% remission | 30 m |
| **Spot size** | 10.4 mrad x 8.7 mrad |
| **Amount of evaluated echoes** | 3 |

### Mechanics/electronics

| | |
|---|---|
| **Connection type** | M12 round connectors with swivel connector |
| **Supply voltage** | 10 V DC ... 30 V DC |
| **Power consumption** | 37 W, typ. 13 W, Start-up phase max. 30 W for 1 s |
| **Housing** | AlSi12, optics cover: PC |
| **Housing color** | Light blue (RAL 5012) |
| **Enclosure rating** | IP65 (IEC 60529:1989+AMD1:1999+AMD2:2013) |
| **Protection class** | III (IEC 61140:2016-11) |
| **Electrical safety** | IEC 61010-1:2010-06 |
| **Weight** | 1.2 kg |
| **Dimensions (L x W x H)** | 151.9 mm x 150 mm x 92.5 mm |

## Performance

| | |
|---|---|
| **Scan/frame rate** | 55,000 measurement point/s ... 165,000 measurement point/s |
| **Response time** | 4 layers, typ. 20 ms [1)]<br>1 layer, typ. 80 ms |
| **Systematic error** | ± 60 mm |
| **Statistical error** | ≤ 30 mm |
| **Integrated application** | Field evaluation with flexible fields on 4 levels, Data output |
| **Number of field sets** | Up to 64 fields |
| **Simultaneous evaluation cases** | Up to 16 evaluations |
| **Filter** | Fog filter<br>Particle filter<br>Average filter<br>Median filter<br>Ground reference evaluation<br>Edge filter<br>Echo filter |

[1)] Depending on the selected filter settings and the object size.

## Interfaces

| | |
|---|---|
| **Ethernet** | ✓, TCP/IP, UDP/IP |
| Function | Host, OPC, NTP, Measured data output (distance, RSSI) |
| Data transmission rate | 10/100 MBit/s |
| **Digital inputs/outputs** | I/O (8 (Multiport)) |
| **Output data** | Contamination indication<br>IMU (secondary sensor data) |
| **Optical indicators** | 2 LEDs |
| **Configuration software** | SOPAS ET<br>Web server (display) |

## Ambient data

| | |
|---|---|
| **Object remission** | 2 % ... > 1,000 % (Reflector) |
| **Electromagnetic compatibility (EMC)** | EN 61000-6-2:2005<br>EN 61000-6-3:2007+A1:2011 |
| **Vibration resistance** | IEC 60068-2-6:2007 |
| **Shock resistance** | EN 60068-2-27:2008 |
| **Ambient operating temperature** | –10 °C ... +50 °C |
| **Storage temperature** | –40 °C ... +75 °C |
| **Ambient light immunity** | 80 klx |

## General notes

| | |
|---|---|
| **Note on use** | The sensor does not constitute a safety component as defined by relevant legislation on machine safety. |

## Classifications

| | |
|---|---|
| **ECl@ss 5.0** | 27270990 |
| **ECl@ss 5.1.4** | 27270990 |
| **ECl@ss 6.0** | 27270913 |
| **ECl@ss 6.2** | 27270913 |
| **ECl@ss 7.0** | 27270913 |

| | |
|---|---|
| **ECl@ss 8.0** | 27270913 |
| **ECl@ss 8.1** | 27270913 |
| **ECl@ss 9.0** | 27270913 |
| **ECl@ss 10.0** | 27270913 |
| **ECl@ss 11.0** | 27270913 |
| **ETIM 5.0** | EC002550 |
| **ETIM 6.0** | EC002550 |
| **ETIM 7.0** | EC002550 |
| **ETIM 8.0** | EC002550 |
| **UNSPSC 16.0901** | 46171620 |

## Dimensional drawing (Dimensions in mm (inch))

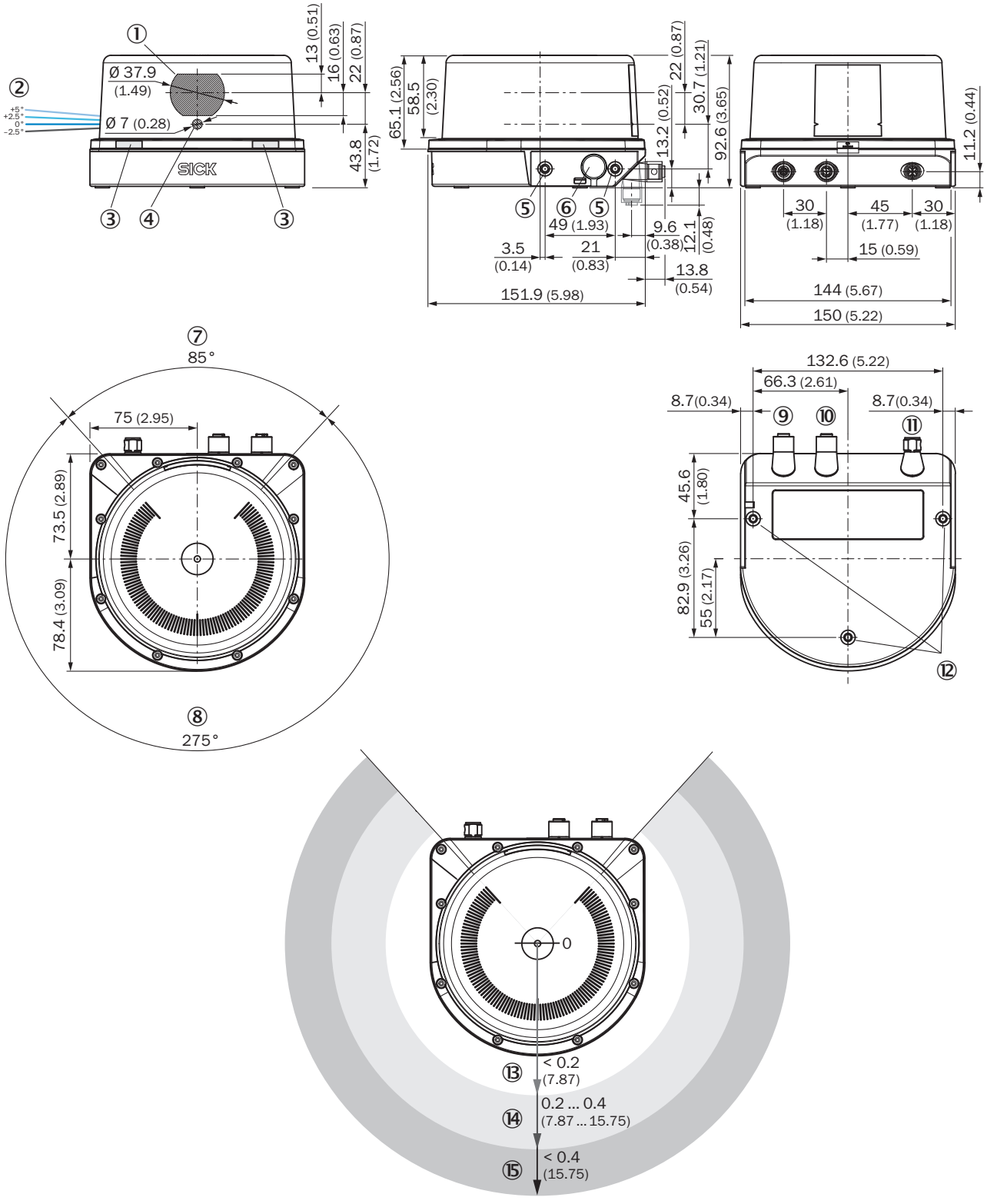


① Receiver
② Laser aperture angle, layers 1 to 4
③ Status LEDs
④ Sender
⑤ Mounting hole M5 x 7.5
⑥ Pressure compensation element

⑦ Blind zone
⑧ Field of view
⑨ Ethernet connection
⑩ I/O connection
⑪ POWER connection
⑫ Mounting hole M5 x 7.5
⑬ Close range (no detection or measurement possible)
⑭ Detection zone
⑮ Measuring range

## Working range diagram

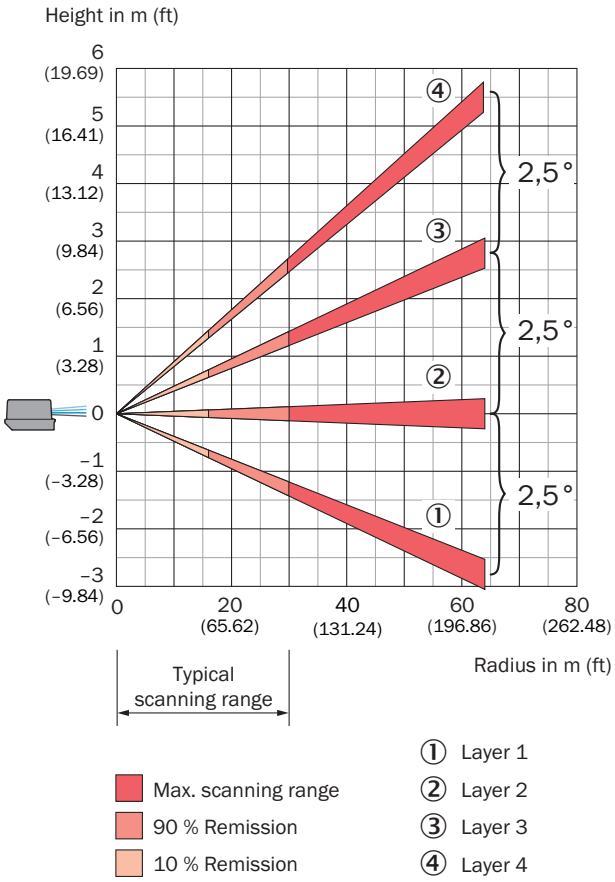

Scanning range in m

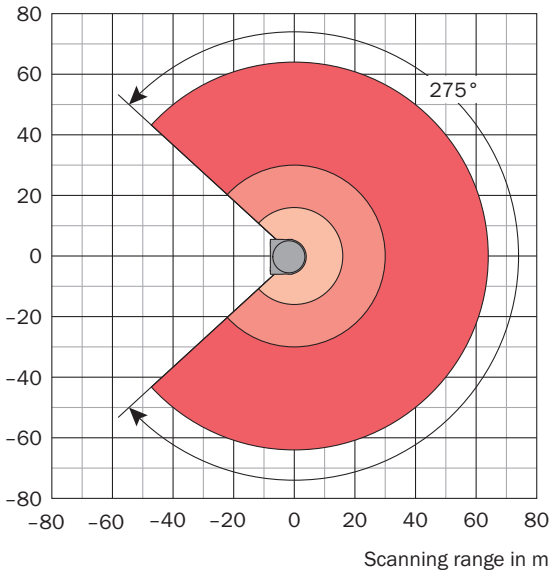


Scanning range max. 64 m

Scanning range for objects up to 90 % remission 30 m

Scanning range for objects up to 10 % Remission 16 m

## Connection type

Ethernet

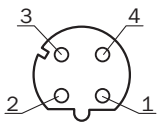


M12 female connector, 4-pin, D-coded

① TX+
② RX+
③ TX-
④ RX-

I/O

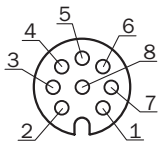


Connector M12, 8-pin, A-coded

① IN1/OUT1
② IN2/OUT2
③ IN3/OUT3
④ IN4/OUT4
⑤ IN5/OUT5
⑥ IN6/OUT6
⑦ GND INx/OUTx
⑧ IN7/OUT7

Power

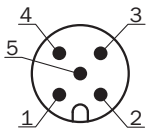


Connector M12, 5-pin, A-coded
① VS 10...30 V
② Reserved
③ GND
④ IN8/OUT8
⑤ Reserved

## Recommended accessories

Other models and accessories ➜ www.sick.com/MRS1000

| | Brief description | Type | Part no. |
|---|---|---|---|
| Plug connectors and cables | | | |
|  | Head A: female connector, M12, 5-pin, straight, A-coded<br>Head B: Flying leads<br>Cable: Sensor/actuator cable, PUR, halogen-free, shielded, 5 m | YF2A25-050UB6XLEAX | 2095733 |
|  | Head A: male connector, M12, 8-pin, straight, A-coded<br>Head B: Flying leads<br>Cable: Sensor/actuator cable, PUR, halogen-free, shielded, 5 m | YM2A28-050UA6XLEAX | 6036155 |
|  | Head A: male connector, M12, 4-pin, straight, D-coded<br>Head B: male connector, RJ45, 4-pin, straight<br>Cable: Ethernet, PROFINET, PUR, halogen-free, shielded, 5 m | YM2D24-050PN1MRJA4 | 2106184 |
| Terminal and alignment brackets | | | |
|  | Easy Mount, X6CRNITI1810 (1.4541) | Mounting kit | 2093194 |

## Recommended services

Additional services ➜ www.sick.com/MRS1000

| | Type | Part no. |
|---|---|---|
| Product, system, and software training | | |
| • **Range of services:** The training contents relate to the following 2D and 3D LiDAR sensors: LMS series, MRS1000, MRS6000, NAV series or TiM series, Training format and location can be worked out in collaboration with SICK | Training LMS/MRS/NAV/TiM | 1612234 |
| Warranty extensions | | |
| • **Product area:** Identification solutions, machine vision, Distance sensors, Detection and ranging solutions<br>• **Range of services:** The services correspond to the scope of the statutory manufacturer warranty (SICK general terms and conditions of purchase)<br>• **Duration:** Five-year warranty from delivery date. | Extended warranty for a total of five years from delivery date | 1680671 |

| | Type | Part no. |
|---|---|---|
| Commissioning | | |
| • **Product area:** 2D LiDAR sensors, 3D LiDAR sensors<br>• **Range of services:** Inspection of connection, fine adjustment, configuration of monitored areas, configuration and optimization of parameters of the LMS/MRS/NAV/TiM as well as tests, Setup of previously defined functions of basic settings, parameters of field application, filters for raw data output and product-specific configuration<br>• **Travel expenses:** The prices do not include travel costs such as hotel, flight, travel time and expenses.<br>• **Duration:** Additional work will be invoiced separately | Commissioning LMS/MRS/ NAV/TiM/LRS (Prime package) | 1680672 |
| Maintenance | | |
| • **Product area:** 2D LiDAR sensors, 3D LiDAR sensors<br>• **Range of services:** Inspection, analysis and restoring of defined functions, Inspection and adaptation of basic settings, parameters of field application, filters for raw data output, and product-specific configuration<br>• **Duration:** Additional work will be invoiced separately<br>• **Travel expenses:** The prices do not include travel costs such as hotel, flight, travel time and expenses. | Maintenance LMS/ MRS/NAV/TiM/LRS | 1682593 |

# SICK AT A GLANCE

SICK is one of the leading manufacturers of intelligent sensors and sensor solutions for industrial applications. A unique range of products and services creates the perfect basis for controlling processes securely and efficiently, protecting individuals from accidents and preventing damage to the environment.

We have extensive experience in a wide range of industries and understand their processes and requirements. With intelligent sensors, we can deliver exactly what our customers need. In application centers in Europe, Asia and North America, system solutions are tested and optimized in accordance with customer specifications. All this makes us a reliable supplier and development partner.

Comprehensive services complete our offering: SICK LifeTime Services provide support throughout the machine life cycle and ensure safety and productivity.

**For us, that is “Sensor Intelligence.”**

# WORLDWIDE PRESENCE:

Contacts and other locations –www.sick.com