www.lemo.com

HGP.00.250.CTLPV

SUMMARY

Wires

Coax	1



Image is for illustrative purpose only

Series	00
Termination type	Female solder
IP rating	68
AWG wire size	0.00 - 0.00
Cable Ø	0.00 - 0.00 mm
Status	active

Download

Request a quote

Catalog

TECHNICAL DETAILS

Mechanics

Shell Style/Model	HGP*: Fixed receptacle, nut fixing, watertight
Keying	Circular, female
Housing Material	Brass (chrome plated [SAE AMS 2460]) shell and collet nut, nickel plated [SAE AMS QQ N 290] brass latch sleeve and mid pieces
Variant	PV : Watertight / Vacuum-tested
Weight	3.43 g

Performance

Configuration	00.250 : 1 Coax (50 Ohm)
Insulator	T: PTFE
Rated Current	4 Amps

Specifications

Contact Type: Coaxial 50 Ohm (Solder)
Contact Dia.: 0.7 mm (0.028in)
Bucket Dia.: 0.6 mm (0.024in)
Test voltage: 2.1 kV (rms)
R (max): 6.1 mOhm
Vtest: 2100 V (AC), 3000 V (DC)

LEMO products and services are provided “as is”. LEMO makes no warranties or representations with regard to LEMO product & services or use of them, express, implied or statutory, including for accuracy, completeness, or security. The user is fully responsible for his products and applications using LEMO components.

Impedance: 50 Ohm
VSWR: 1.09 + 0.11 * f/GHz

Others

Endurance (Shell): 5000 mating cycles
Temp (min / max): -20°C / +100°C
F ret (min): 100 N
R leak (He) (max): 0.0000001 mbar*l/s (if vacuum-tested)
Salt Spray Corrosion: >1000 hr
Pressure: 60 bars

DRAWINGS

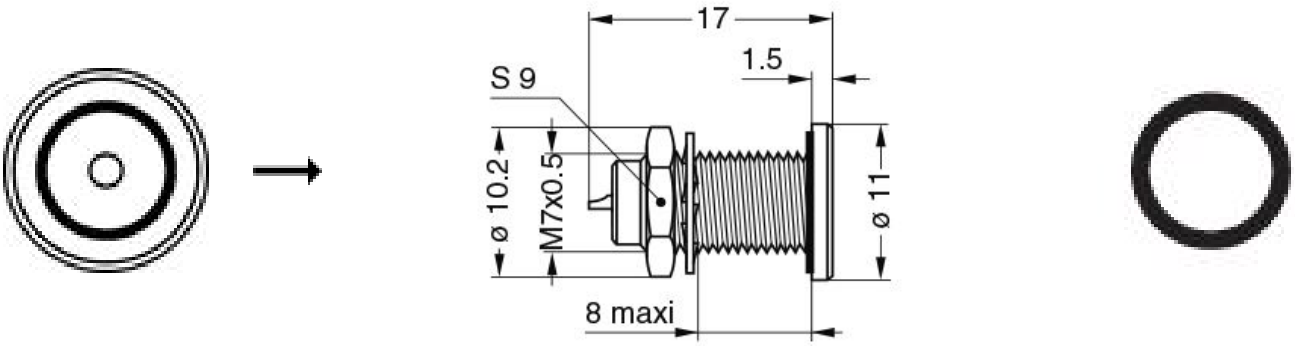

Dimensions

	A	B	L	S3	e
mm.	11	10.2	17	9	M7x0.5
in.	0,43	0,40	0,67	0,35	

RECOMMENDED BY LEMO

Tools

LEMO products and services are provided "as is". LEMO makes no warranties or representations with regard to LEMO product & services or use of them, express, implied or statutory, including for accuracy, completeness, or security. The user is fully responsible for his products and applications using LEMO components.

Cables

159580	PVC	Black	
17420	PVC	Black	
17450	COPOLYMER	Black	
178190	PTFE	Brown	
18000	PTFE	Brown	
18700	PTFE	White	
18800	PTFE	White	
196270	PTFE	White	
31600	PTFE	Brown	
62000	PVC	Black	
CCX.50.030.083.180B		White	
CCX.50.RG0.58AU14B	FEP	White	
CCX.50.RG1.74-U25N	PVC	Black	
CCX.50.RG1.74AU28N	PVC	Black	
CCX.50.RG1.74AU28N	PVC	Black	
CCX.50.RG1.74U25N	PVC	Black	
CCX.50.RG1.78BU18M	FEP	Brown	
CCX.50.RG1.78BU18M	PTFE	Brown	
CCX.50.RG1.88AU24B	TFE	White	
CCX.50.RG1.88AU26B	PFA	White	
CCX.50.RG1.88AU26B	PTFE	White	
CCX.50.RG1.96AU19B	PTFE	White	
CCX.50.RG1.96AU20B	PFA	White	
CCX.50.RG3.16BU26M	FEP	Brown	
CCX.50.RG3.16U28M	PTFE	Brown	
CCX.75.040.195327G	PVC	Grey	
CCX.75.RG0.59BU62N	PVC	Black	
CCX.75.RG1.79BU26M	FEP	Brown	
CCX.75.RG1.87AU26B	PFA	White	
CCX.75.RG1.87AU27B	PTFE	White	
CCX.93.RG0.62AU62N	PVC	Black	
CCX.95.RG1.80BU36M	PTFE	Brown	
CCX.95.RG1.95AU37B	PFA	White	

LEMO products and services are provided “as is”. LEMO makes no warranties or representations with regard to LEMO product & services or use of them, express, implied or statutory, including for accuracy, completeness, or security. The user is fully responsible for his products and applications using LEMO components.