molex
one company > a world of innovation

This document was generated on 02/04/2022

PLEASE CHECK WWW.MOLEX.COM FOR LATEST PART INFORMATION

Part Number: 0878630025
Status: Active
Overview: Serial Attached SCSI (SAS) Connectors
Description: 1.27mm Signal Pitch, 0.80mm SCSI Pitch, 1.27mm Power Pitch SAS-2 Receptacle, Vertical, Press fit, 3.50mm Tail Length, 29 Circuits, Lead-Free

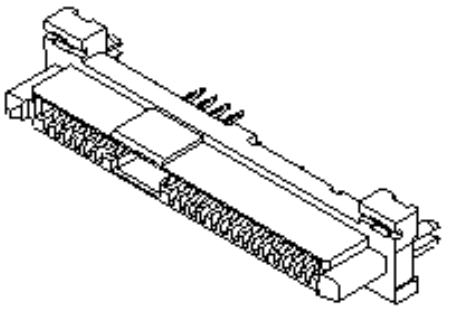

Series image - Reference only

Documents:

- 3D Model
- Drawing (PDF)
- 3D Model (PDF)
- Product Specification PS-87863-060-001 (PDF)
- Packaging Specification PK-87863-001-001 (PDF)
- RoHS Certificate of Compliance (PDF)

Agency Certification

CSA	LR19980
UL	E29179

General

Product Family	I/O Connectors
Series	87863
Application	Board-to-Board
Comments	No pick and place cap
Component Type	Receptacle
Overview	Serial Attached SCSI (SAS) Connectors
Product Name	SAS 6G, SAS-2
Type	N/A
UPC	822350197410

Physical

Boot Color	N/A
Circuits (Loaded)	29
Circuits (maximum)	29
Circuits Detail	Signal 14, Power 15
Color - Resin	Black
Durability (mating cycles max)	500
Flammability	94V-0
Gender	Female
Keying to Mating Part	Yes
Lock to Mating Part	None
Material - Metal	Phosphor Bronze
Material - Plating Mating	Gold
Material - Plating Termination	Tin
Material - Resin	High Temperature Thermoplastic
Net Weight	1.610/g
Number of Rows	2
Orientation	Vertical
PC Tail Length	3.00mm, 3.50mm
PCB Locator	Yes
PCB Retention	Yes
PCB Thickness - Recommended	2.29mm, 3.18mm
Packaging Type	Tray
Panel Mount	Yes
Pitch - Mating Interface	0.80mm, 1.27mm
Pitch - Termination Interface	0.80mm, 1.27mm
Plating min - Mating	0.762µm
Plating min - Termination	2.540µm
Polarized to Mating Part	Yes
Polarized to PCB	Yes
Surface Mount Compatible (SMC)	N/A

EU ELV
Not Relevant

EU RoHS
Compliant

China RoHS

REACH SVHC
Not Contained Per - D(2021)4569-DC (8 July 2021)

Halogen-Free Status
Low-Halogen

For more information, please visit Contact US

China ROHS	Green Image
ELV	Not Relevant
RoHS Phthalates	Not Contained

Search Parts in this Series
87863 Series

Mates With
87679 , 87799 , 87703 , SFF 8482 Hard Disk Drive and Backplane Plug

Temperature Range - Operating	0° to +55°C
Termination Interface: Style	Through Hole - Compliant Pin
Waterproof / Dustproof	No
Wire Size AWG	N/A
Electrical	
Current - Maximum per Contact	1.5A
Shielded	No
Voltage - Maximum	30V
Solder Process Data	
Lead-freeProcess Capability	N/A
Material Info	
Reference - Drawing Numbers	
Electrical Model Document	EE-87863-001-001, EE-87863-002-001, EE-87863-003-001, EE-87863-004-001, EE-87863-005-001, EE-87863-006-001, EE-87863-007-001, EE-87863-008-001
Packaging Specification	PK-87863-001-001
Product Specification	PS-87863-060-001
Sales Drawing	SD-87863-059-001