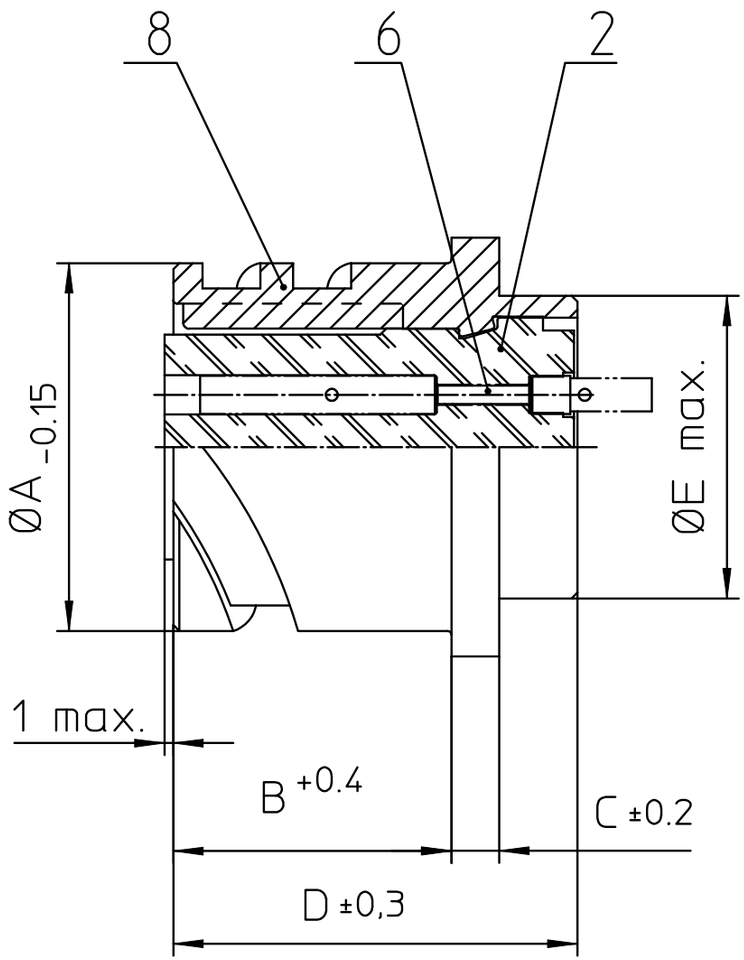

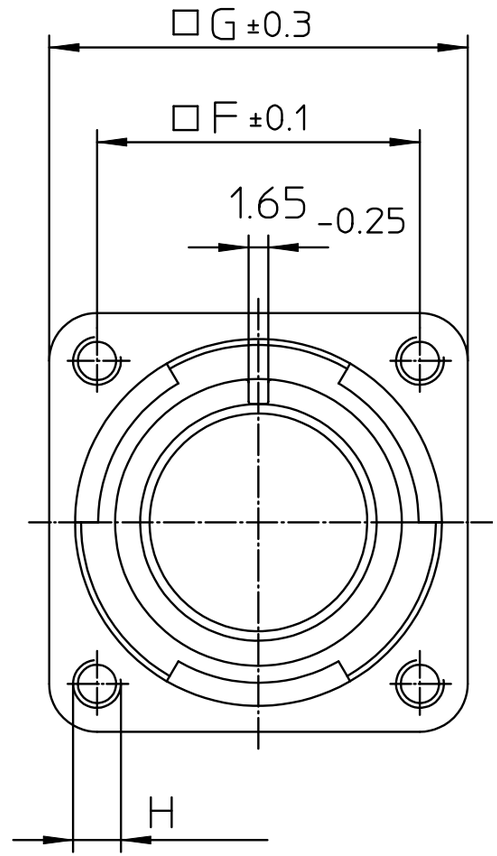

NO.	MASSE / DIMENSIO
A	40.9
B	23.05
C	4
D	33.8
E	35.3
F	34.9
G	44.5
H	M4

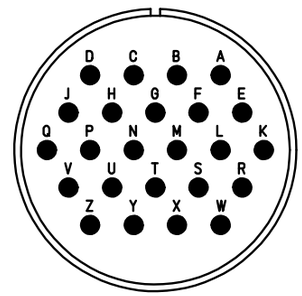

NO.	BESCHREIBUNG / DESCRIPTION
2	ISOLIERKÖRPER BUCHSE / INSULATOR SOCKET
6	KONTAKTBUCHSE / CONTACT SOCKET
8	DOSENGEHÄUSE / SHELL

Note: Due to an automatic nomenclature system, numbers generated may not be sequential.

Specification and Dimensions subject to change
Drawings illustrate normal insulator positioning

Material Specification:	
Shell Material:	Aluminium alloy
Shell Plating:	Olive drab chromate over cadmium (conductive)
Insulator Material:	CR-Elastomere
Contact Material:	Copper alloy
Contact Plating:	Gold 0,5 mµ

all dimensions are in mm
Dimensions without tolerance indications are general tolerances in acc. with DIN7168m

drawing for
CUSTOMER

ITT
Engineered for life
ITT CANNON GmbH
D - 71384 Weinstadt/Germany

description
CA3102E24-28S-B-109-A176
Box mounting receptacle (rear mount, threaded holes)

AWG Crimp / Socket / Layout: 24-28

© All rights reserved. Reproduction or issue to third in any form whatever is only permitted with written authorization of ITT Cannon

page 1/1

revision
2500 6. Dec 21