Low Current Consumption 32.768kHz
OZ-I Type
2.0 x 1.6 mm SMD Crystal Oscillator

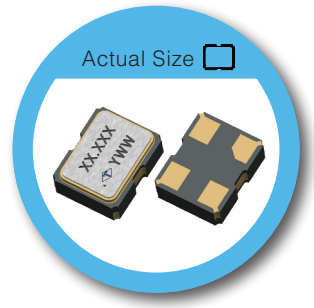

RoHS Compliant

FEATURE

- Low Power Supply Voltage: 3.3, 2.5, 1.8V Supply Options
- Singled-end Output: CMOS
- Frequency: 32.768kHz
- Low Current Consumption: 18μA Max
- Temperature Range: -40°C to 85°C Operation
- Pb-free/RoHS Compliant

TYPICAL APPLICATION

- RTC Module
- Smartphone
- IoT
- Wearable Device
– Watch, Medical

DIMENSION (mm)

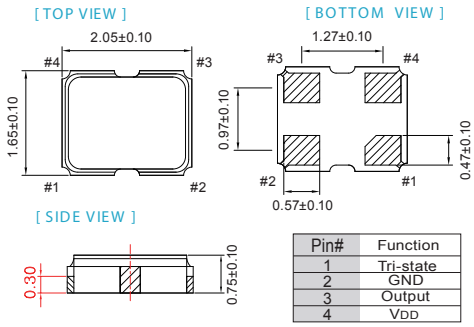

Pin#	Function
1	Tri-state
2	GND
3	Output
4	VDD

SOLDER PAD LAYOUT (mm)

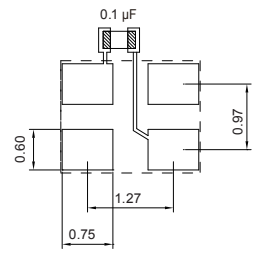

To ensure optimal oscillator performance, place a by-pass capacitor of 0.1μF as close to the part as possible between Vdd and GND pads.

ELECTRICAL SPECIFICATION

Parameter		3.3V		2.5V		1.8V		Unit
		Min.	Max.	Min.	Max.	Min.	Max.	
Supply Voltage Variation (V_{DD})		V_{DD}-10%	V_{DD}+10%	V_{DD}-5%	V_{DD}+5%	V_{DD}-5%	V_{DD}+5%	V
Frequency Range		32.768						kHz
Supply Current (No Load)		-	18	-	18	-	18	uA
Output Level	Output High	2.97	-	2.25	-	1.62	-	V
	Output Low	-	0.33	-	0.25	-	0.18	V
Transition Time (10%-90%)	Rise Time / Fall Time	-	15.0	-	15.0	-	15.0	nSec
Duty Cycle		45	55	45	55	45	55	%
Startup Time		-	20	-	20	-	20	mSec
Tri-State Mode (Input to Pin 2)	Enable	0.7 x V_{DD}	-	0.7 x V_{DD}	-	0.7 x V_{DD}	-	V
	Disable	-	0.3 x V_{DD}	-	0.3 x V_{DD}	-	0.3 x V_{DD}	
Stand by Current		-	3	-	3	-	3	uA
Output Loading (CMOS)		-	15	-	15	-	15	pF
Aging (@ 25°C, 1st Year)		-	±3	-	±3	-	±3	ppm
Storage Temp. Range		-55	+125	-55	+125	-55	+125	°C

FREQ. STABILITY vs. TEMP. RANGE

ppm / Temp.(°C)	±20	±25	±50
-10~+60	○	○	○
-20~+70	○	○	○
-40~+85	△	○	○

*O: Available △: Conditional X: Not available
*Inclusive of calibration @ 25°C ,operating temperature rrange,input Voltage variation,load variation,aging (1st year),shock,and vibration

Note: not all combination of options are available. Other specifications may be available upon request.