外形图/ OUTLINE DRAWINGS

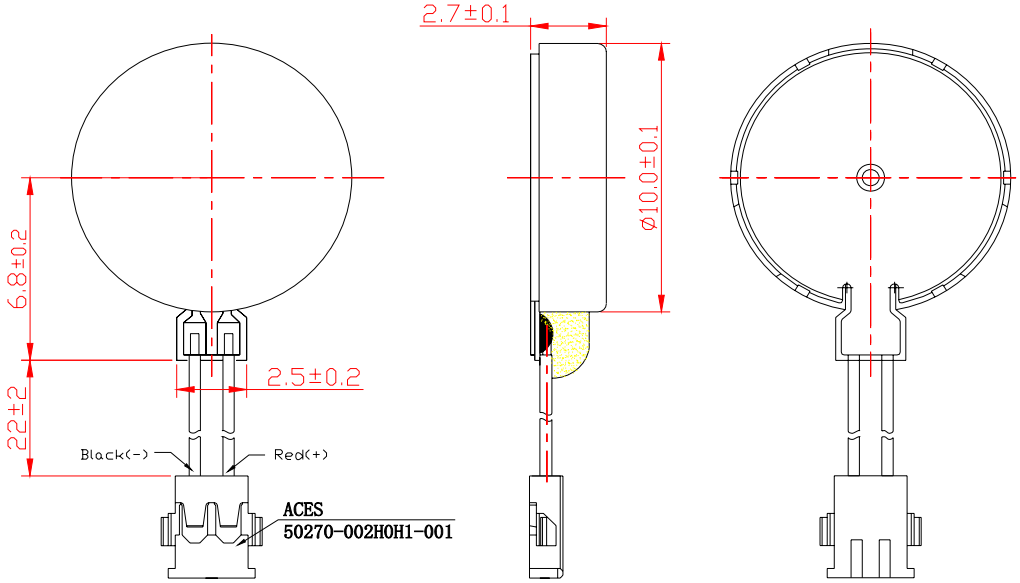

技术要求/Technic requirment
1.额定电压/Rate voltage:3.0V
2.额定电流/Rate current:90mA Max
3.额定转速/Rate speed:9000rpm Min
4.起动电压/Starting voltage:2.3V Max
5.端子阻抗/Terminal resistance:
31Ω±15%(单相/Single phase)
59Ω±15%(双相/Double phase)
6.在100V直流下，导线和机壳间绝缘电阻/
At DC 100V,that lead wire and case thin out
the insulation resistance: ＞10MΩ
7.未注公差/Unmark tolerance:±0.1

HARDNESS	ANGLE	TOLERANCE	MATERIAL	SCALE	DATE
	3rd	±0.1/±0.5°		10/1	140712
DESIGNED BY	CHECKED BY	APPROVED BY			
YL	WF	HJH			
Vybronics			VC1027B902F		