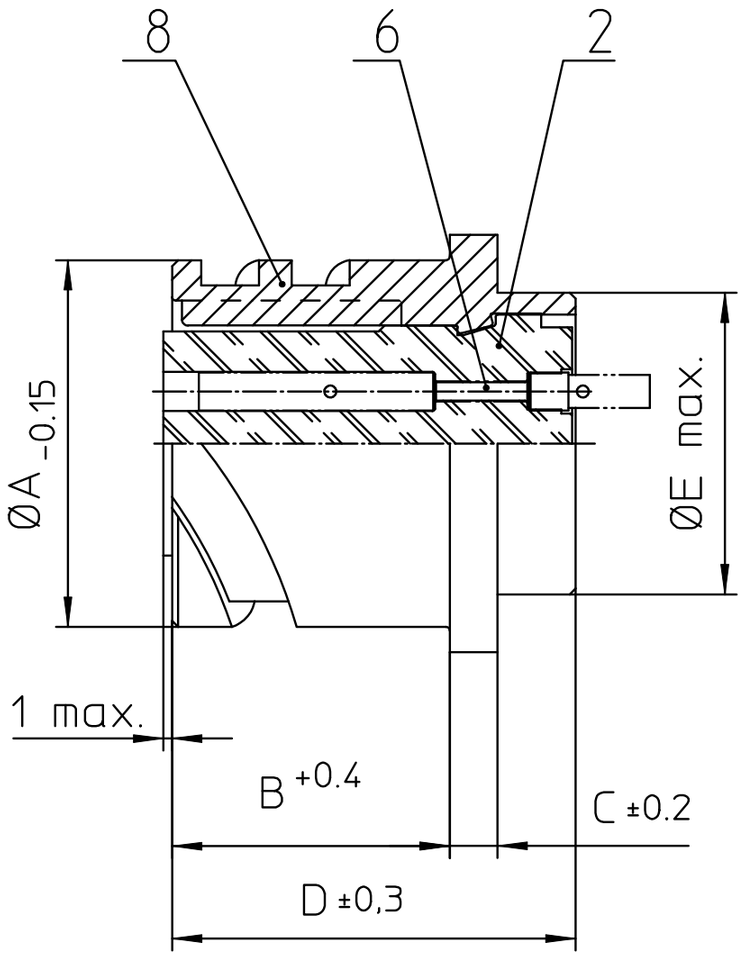

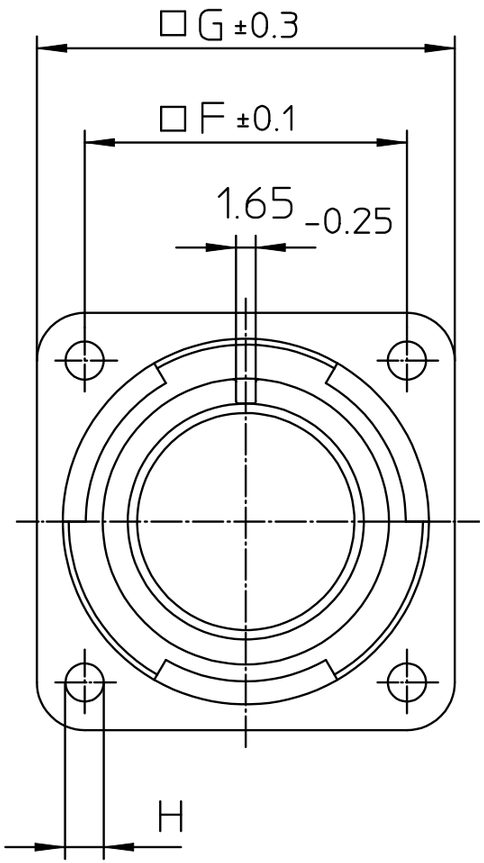

NO.	MASSE / DIMENSIO
A	46.7
B	20.6
C	4
D	33.8
E	41.4
F	39.7
G	50.8
H	3.7

NO.	BESCHREIBUNG / DESCRIPTION
2	ISOLIERKÖRPER BUCHSE / INSULATOR SOCKET
6	KONTAKTBUCHSE / CONTACT SOCKET
8	DOSENGEHÄUSE / SHELL

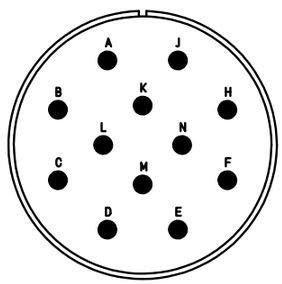

Note: Due to an automatic nomenclature system, numbers generated may not be sequential.

Specification and Dimensions subject to change
Drawings illustrate normal insulator positioning

Material Specification:	
Shell Material:	Aluminium alloy
Shell Plating:	Zinc cobalt, black (conductive)
Insulator Material:	CR-Elastomere
Contact Material:	Copper alloy
Contact Plating:	Hard silver

all dimensions are in mm
Dimensions without tolerance indications are general tolerances in acc. with DIN7168m

drawing for
CUSTOMER

ITT
Engineered for life
ITT CANNON GmbH
D - 71384 Weinstadt/Germany

description
CA3102E28-51S-B-F80-A232
Box mounting receptacle

AWG Crimp / Socket / Layout: 28-51

© All rights reserved. Reproduction or issue to third in any form whatever is only permitted with written authorization of ITT Cannon

page 1/1

revision
2500 6. Dec 21