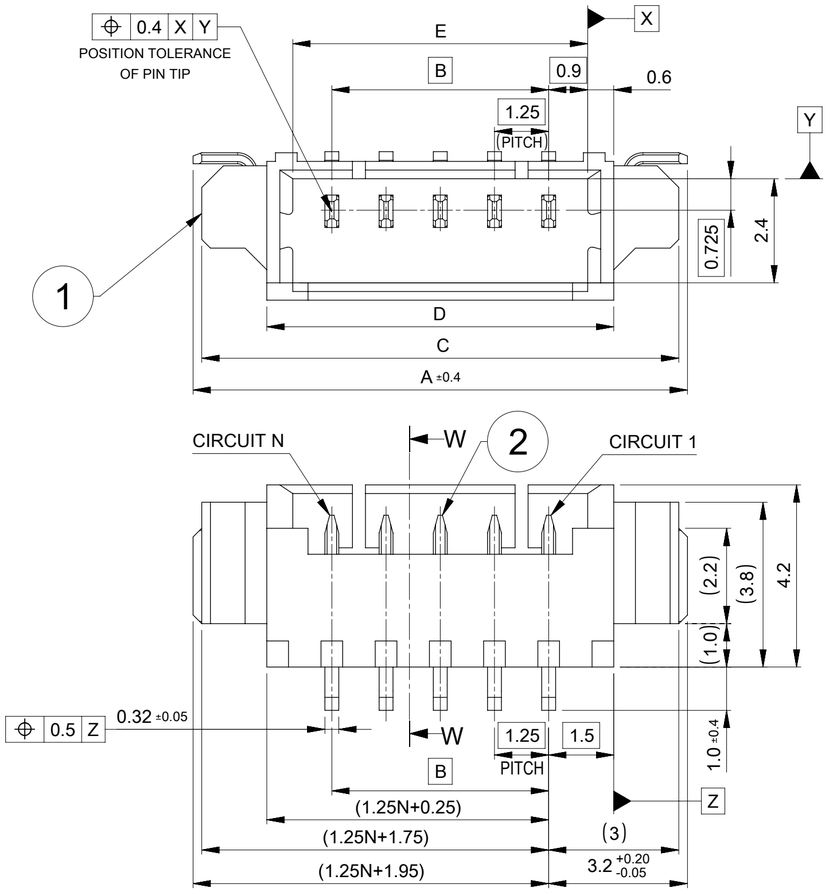

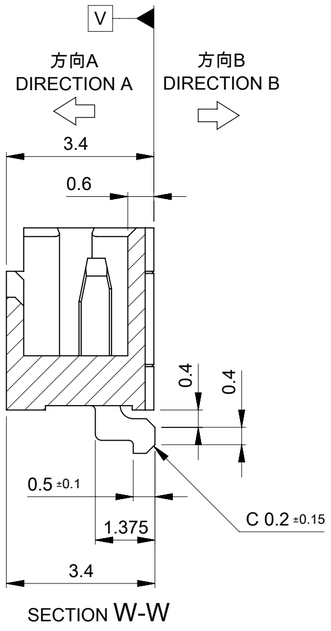

SECTION W-W

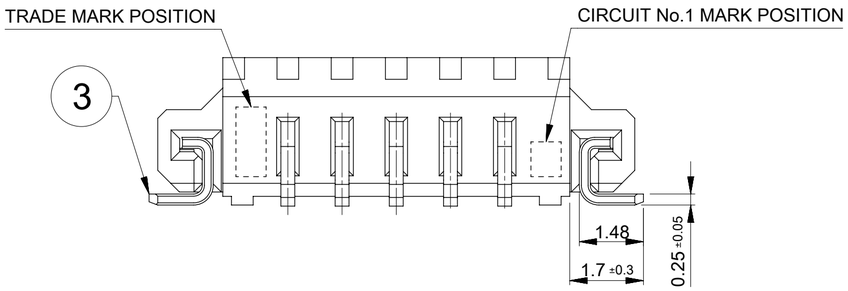

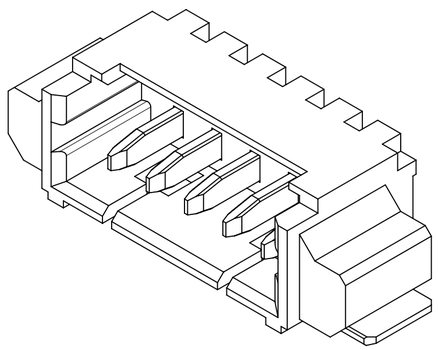

NOTES

1. 材料およびめっき仕様 : TABLE 1 参照
   MATERIAL AND PLATING : REFER TO TABLE 1
2. 適用製品及び各種仕様書はSHEET 5を参照のこと
   REFER TO SHEET 5 ABOUT APPLICABLE PRODUCTS AND VARIOUS SPECIFICATIONS
3. 梱包形態 : SHEET 3 参照
   PACKAGING INFOMATION : SEE SHEET 3
4. テールおよびネイルのズレは基準面 V に対しA方向に0.05 MAX、B方向に0.1 MAX
   MISALIGNMENT OF TAILS AND NAILS FROM V,
   DIRECTION A: 0.05 MAX, DIRECTION B: 0.1 MAX
5. 端子テール部およびネイルの平坦度は0.1以下
   COPLANARITY OF TAIL AND NAIL TO BE 0.1 MAX
6. 本製品は錫めっき品です。金めっき品は532610000-SD 000をご参照ください
   THIS PRODUCT IS TIN PLATING TYPE.
   PLEASE REFER TO 532610000-SD FOR GOLD PLATING TYPE.
7. ロックの数は、2,3極は1ロック、
   4極以上は2ロック。
   LOCKING WINDOW: ONE PLACE FOR 2 AND 3 CIRCUIT,
   AND TWO PLACES FOR MORE THAN 4 CIRCUIT.

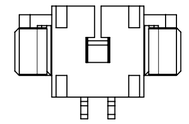

△7 2, 3極形状 (1ロック)
FIGURE OF 2, 3 CIRCUIT (1 LOCK)

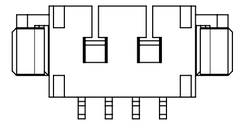

△7 4極以上ロック形状 (2ロック)
FIGURE OF MORE THAN 4 CIRCUIT (2 LOCKS)

△1 TABLE1

番号 NO.	部品 PART	材質 MATERIAL
①	ハウジング HOUSING	ポリアミド(PA), UL94V-0, GLASS-FILLED, 色: ナチュラル(ベージュ) POLYAMIDE(PA), UL94V-0, GLASS-FILLED, COLOR: NATURAL (BEIGE)
②	ターミナル TERMINAL	りん青銅 PHOSPHOER BRONZE
		無光沢錫めっき 1.0 MICROMETER MINIMUM MATTE TIN PLATING 1.0 MICROMETER MINIMUM
		ニッケルめっき 1.0 MICROMETER MINIMUM NICKEL PLATING 1.0 MICROMETER MINIMUM
③	ネイル NAIL	りん青銅 PHOSPHOER BRONZE
		無光沢錫めっき 1.0 MICROMETER MINIMUM MATTE TIN PLATING 1.0 MICROMETER MINIMUM
		ニッケルめっき 1.0 MICROMETER MINIMUM NICKEL PLATING 1.0 MICROMETER MINIMUM

DOCUMENT STATUS	P1	RELEASE DATE	2021/12/24 09:26:44

E	D	C	B	A	△11 発注番号 ORDER NO. / 梱包形態 : エンボス梱包 PACKAGING : EMBOSSED TAPE AND REEL	極数 CIRCUIT SIZE
21.8	23	26	20	26.4	532611771	17
19.3	20.5	23.5	17.5	23.9	532611571	15
18.05	19.25	22.25	16.25	22.65	532611471	14
16.8	18	21	15	21.4	532611371	13
15.55	16.75	19.75	13.75	20.15	532611271	12
14.3	15.5	18.5	12.5	18.9	532611171	11
13.05	14.25	17.25	11.25	17.65	532611071	10
11.8	13	16	10	16.4	532610971	9
10.55	11.75	14.75	8.75	15.15	532610871	8
9.3	10.5	13.5	7.5	13.9	532610771	7
8.05	9.25	12.25	6.25	12.65	532610671	6
6.8	8	11	5	11.4	532610571	5
5.55	6.75	9.75	3.75	10.15	532610471	4
4.3	5.5	8.5	2.5	8.9	532610371	3
3.05	4.25	7.25	1.25	7.65	532610271	2

THIS DRAWING CONTAINS INFORMATION THAT IS PROPRIETARY TO MOLEX ELECTRONIC TECHNOLOGIES, LLC AND SHOULD NOT BE USED WITHOUT WRITTEN PERMISSION

DIMENSION UNITS: mm
SCALE: NTS

GENERAL TOLERANCES (UNLESS SPECIFIED)

ANGULAR TOL	±	3.0 °
4 PLACES	±	0.2
3 PLACES	±	0.2
2 PLACES	±	0.2
1 PLACE	±	0.2
0 PLACES	±	0.2

DRAFT WHERE APPLICABLE MUST REMAIN WITHIN DIMENSIONS

CURRENT REV DESC:

EC NO: 688261
DRWN: QHE31 2021/12/15
CHK'D: SAKIYAMA 2021/12/21
APPR: KOMURAKAMI 2021/12/24

INITIAL REVISION:
DRWN: QHE31 2021/12/15
APPR: KOMURAKAMI 2021/12/24

molex

PICOBLADE 1.25
SMT RIGHT ANGLE TIN PLATING TYPE

PRODUCT CUSTOMER DRAWING

DOCUMENT NUMBER	DOC TYPE	DOC PART	REVISION
532610001-SD	PSD	000	A

THIRD ANGLE PROJECTION | DRAWING: A2-SIZE | SERIES: 53261 | MATERIAL NUMBER: SEE CHART OF SHEET3 | CUSTOMER: GENERAL | SHEET NUMBER: 1 OF 5

FORMAT: Molex-A2
REVISION: H
DATE: 2018/01/01

NOTES

8 製品輪郭線からパッドまでの寸法を示す。
DIMENSIONS FROM CONNECTOR OUTLINE TO PAD

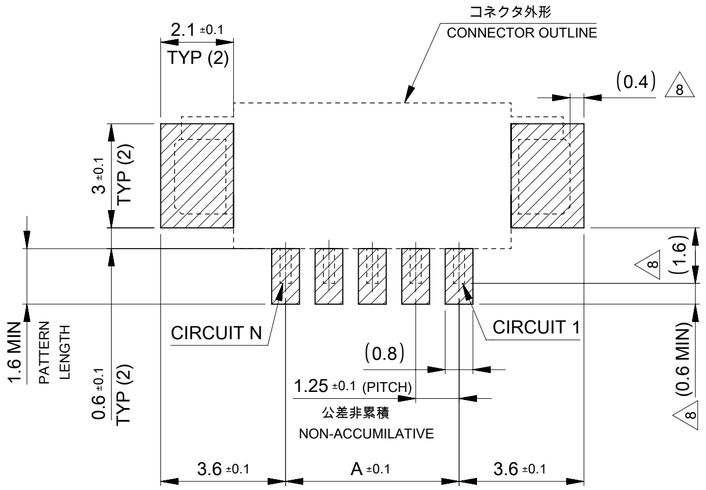

推奨基板レイアウト (実装面側)
RECOMMENDED P.W.B LAYOUT : COMPONENT SIDE
(参考：基板厚 1.0mm, メタルマスク厚さ: 0.15mm, マスク開口率:100%)
(REFERENCE : P.W.B THICKNESS 1.0mm, STENCIL THICKNESS: 0.15mm, APERTURE:100%)

嵌合相手：51021 シリーズ
MATE WITH : 51021 SERIES

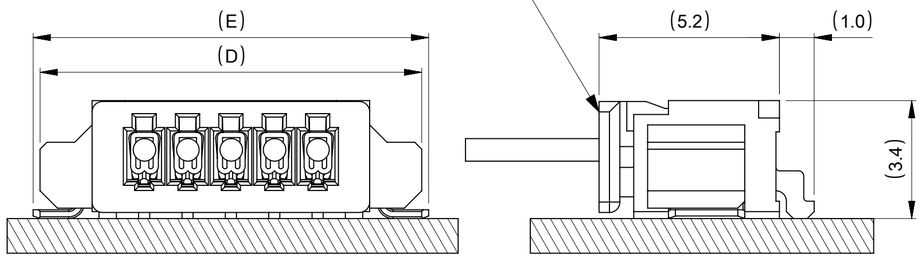

嵌合図
MATED CONNECTOR

21.8	23	26	20	26.4	17
19.3	20.5	23.5	17.5	23.9	15
18.05	19.25	22.25	16.25	22.65	14
16.8	18	21	15	21.4	13
15.55	16.75	19.75	13.75	20.15	12
14.3	15.5	18.5	12.5	18.9	11
13.05	14.25	17.25	11.25	17.65	10
11.8	13	16	10	16.4	9
10.55	11.75	14.75	8.75	15.15	8
9.3	10.5	13.5	7.5	13.9	7
8.05	9.25	12.25	6.25	12.65	6
6.8	8	11	5	11.4	5
5.55	6.75	9.75	3.75	10.15	4
4.3	5.5	8.5	2.5	8.9	3
3.05	4.25	7.25	1.25	7.65	2
E	D	C	B	A	極数 CIRCUIT SIZE

THIS DRAWING CONTAINS INFORMATION THAT IS PROPRIETARY TO MOLEX ELECTRONIC TECHNOLOGIES, LLC AND SHOULD NOT BE USED WITHOUT WRITTEN PERMISSION

DIMENSION UNITS	SCALE
mm	NTS

GENERAL TOLERANCES (UNLESS SPECIFIED)

ANGULAR TOL	±	3.0 °
4 PLACES	±	0.2
3 PLACES	±	0.2
2 PLACES	±	0.2
1 PLACE	±	0.2
0 PLACES	±	0.2

DRAFT WHERE APPLICABLE MUST REMAIN WITHIN DIMENSIONS

CURRENT REV DESC:

EC NO: 688261
DRWN: QHE31 2021/12/15
CHK'D: SAKIYAMA 2021/12/21
APPR: KOMURAKAMI 2021/12/24

INITIAL REVISION:
DRWN: QHE31 2021/12/15
APPR: KOMURAKAMI 2021/12/24

molex

PICOBLADE 1.25
SMT RIGHT ANGLE TIN PLATING TYPE

PRODUCT CUSTOMER DRAWING

DOCUMENT NUMBER	DOC TYPE	DOC PART	REVISION
532610001-SD	PSD	000	A

THIRD ANGLE PROJECTION	DRAWING	SERIES	MATERIAL NUMBER	CUSTOMER	SHEET NUMBER
	A2-SIZE	53261	SEE CHART OF SHEET3	GENERAL	2 OF 5

DOCUMENT STATUS	P1	RELEASE DATE	2021/12/24 09:26:44

FORMAT: master-tb-prod-A2
REVISION: H
DATE: 2019/01/18

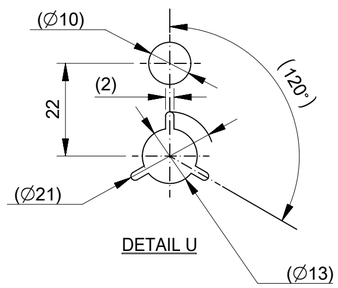

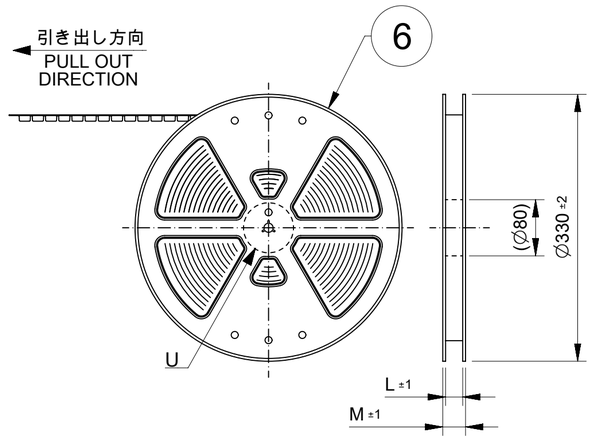

注釈　NOTE

9. 梱包数量: 1000個/リール
   NUMBER OF CONNECTOR: 1000PCS/REEL
10. リードテープ長さ LEAD TAPE LENGTH

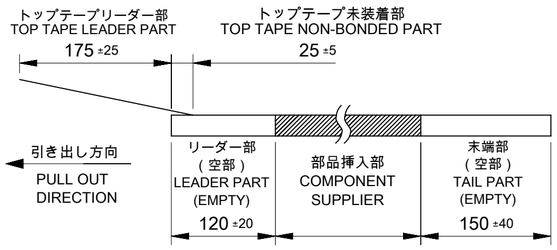

△11 発注番号
ORDER NUMBER
53261**71
極数
CIRCUIT

△12 材料: TABLE 2参照
MATERIAL: REFER TO TABLE 2

△13 コネクタハウジング平面部
CONNECTOR HOUSING FLAT AREA.

14. トップテープの剥離強度はIEC 60286-3に準拠。
    TOP TAPE PEELING FORCE IS DEFINED BY IEC 60286-3.
15. 本製品は乾燥剤入りハイバリア梱包仕様である。
    THIS PRODUCT IS HIGH BARRIER PACKAGE WITH DESICCANT.
16. 梱包仕様書：SPK-53261-002
    PACKAGING SPECIFICATION: SPK-53261-002

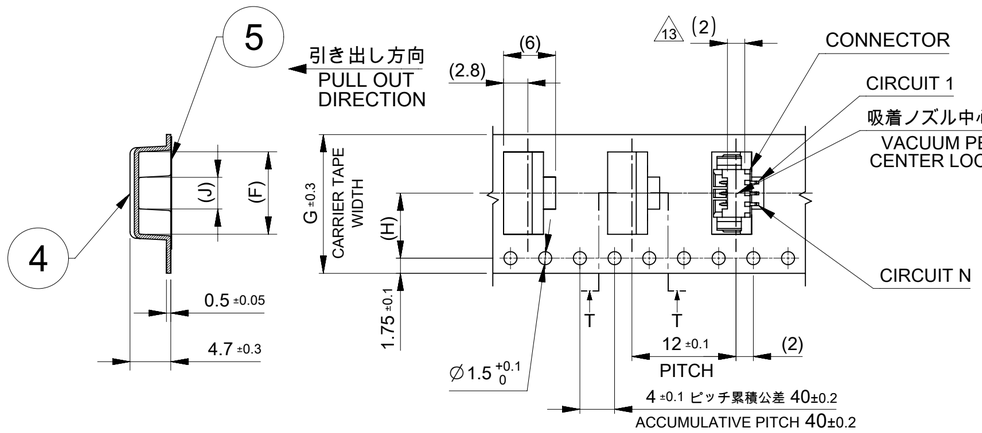

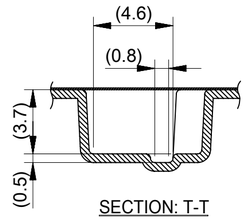

16mm幅(2~3極用)および24mm幅(4~10極用)キャリアテープ
16mm (FOR 2~3 CIRCUIT) OR 24mm (FOR 4~10 CIRCUIT) WIDTH CARRIER TAPE

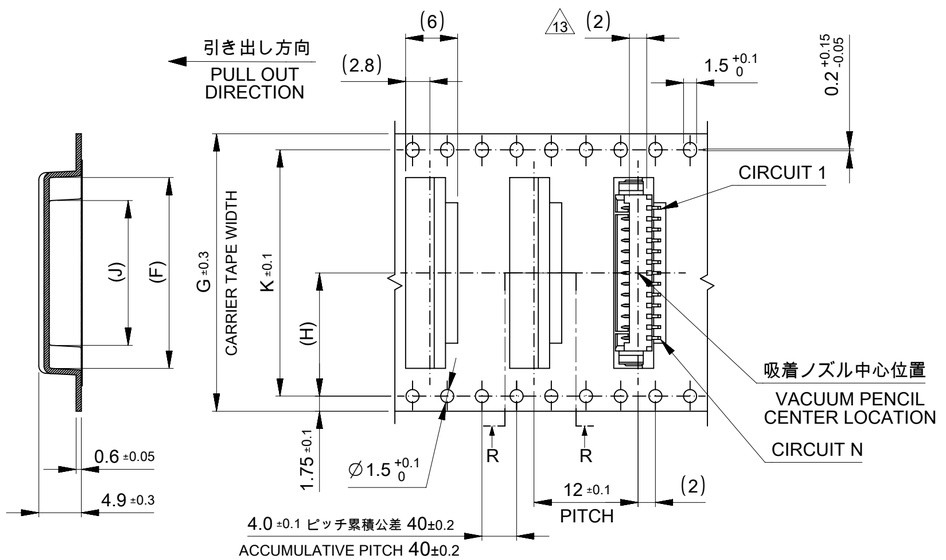

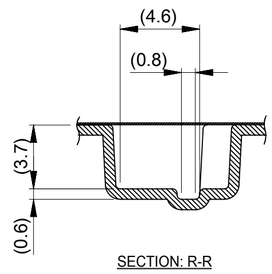

32mm幅(11~13極用)および44mm幅(14~15, 17極用)キャリアテープ
32mm (FOR 11~13 CIRCUIT) OR 44mm (FOR 14~15, 17 CIRCUIT) WIDTH CARRIER TAPE

△12 TABLE2

番号 NO.	部品 PART	材質 MATERIAL
④	キャリアテープ CARRIER TAPE	ポリプロピレン(PP) POLYPROPYLENE(PP)
⑤	トップテープ TOP TAPE	ポリエチレン (PE)、その他 POLYETHYLENE (PE), ETC
⑥	リール REEL	ポリスチレン(PS) < リサイクル材を含む > POLYSTYRENE(PS) < RECYCLE MATERIAL CONTAINED >

M	L	K	J	H	キャリアテープ幅 G CARRIER TAPE WIDTH G	F	極数 CIRCUIT SIZE
49.4	45.4	40.4	21.2	20.2	42	27	17
			18.7			24.5	15
			17.45			23.25	14
37.4	33.4	28.4	16.2	14.2	32	22	13
			14.95			20.75	12
			13.7			19.5	11
29.4	25.4	-	12.45	11.5	24	18.25	10
			11.2			17	9
			9.95			15.75	8
			8.7			14.5	7
			7.45			13.25	6
			6.2			12	5
			4.95			10.75	4
21.4	17.4	-	3.7	7.5	16	9.5	3
			2.45			8.25	2

THIS DRAWING CONTAINS INFORMATION THAT IS PROPRIETARY TO MOLEX ELECTRONIC TECHNOLOGIES, LLC AND SHOULD NOT BE USED WITHOUT WRITTEN PERMISSION

DIMENSION UNITS	SCALE
mm	NTS

GENERAL TOLERANCES (UNLESS SPECIFIED)

ANGULAR TOL	±	3.0 °
4 PLACES	±	0.2
3 PLACES	±	0.2
2 PLACES	±	0.2
1 PLACE	±	0.2
0 PLACES	±	0.2

DRAFT WHERE APPLICABLE MUST REMAIN WITHIN DIMENSIONS

CURRENT REV DESC:

EC NO: 688261
DRWN: QHE31 2021/12/15
CHK'D: SAKIYAMA 2021/12/21
APPR: KOMURAKAMI 2021/12/24

INITIAL REVISION:
DRWN: QHE31 2021/12/15
APPR: KOMURAKAMI 2021/12/24

molex

PICOBLADE 1.25
SMT RIGHT ANGLE TIN PLATING TYPE

PRODUCT CUSTOMER DRAWING

DOCUMENT NUMBER	DOC TYPE	DOC PART	REVISION
532610001-SD	PSD	000	A

THIRD ANGLE PROJECTION	DRAWING	SERIES	MATERIAL NUMBER	CUSTOMER	SHEET NUMBER
	A2-SIZE	53261	SEE CHART OF SHEET3	GENERAL	3 OF 5

DOCUMENT STATUS	P1	RELEASE DATE	2021/12/24 09:26:44

FORMAT: A-Size-Grid-A2
REVISION: 2018-01
DATE: 2018/01/01

532611071
韓国生産分に適用
APPLIES TO PRODUCT
PRODUCED BY MXK

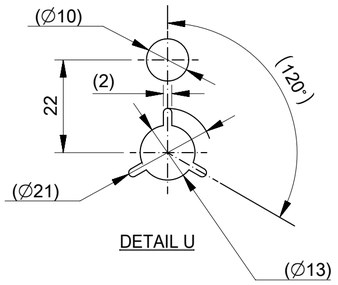

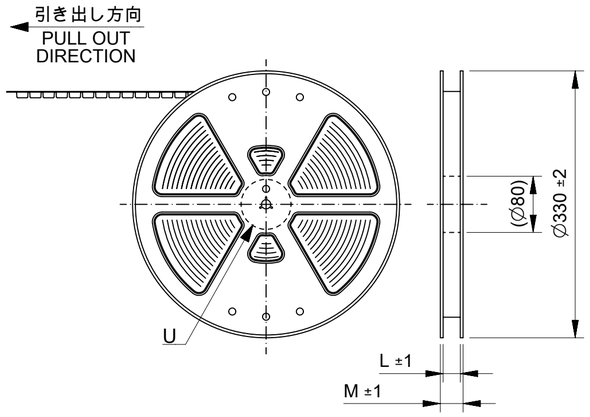

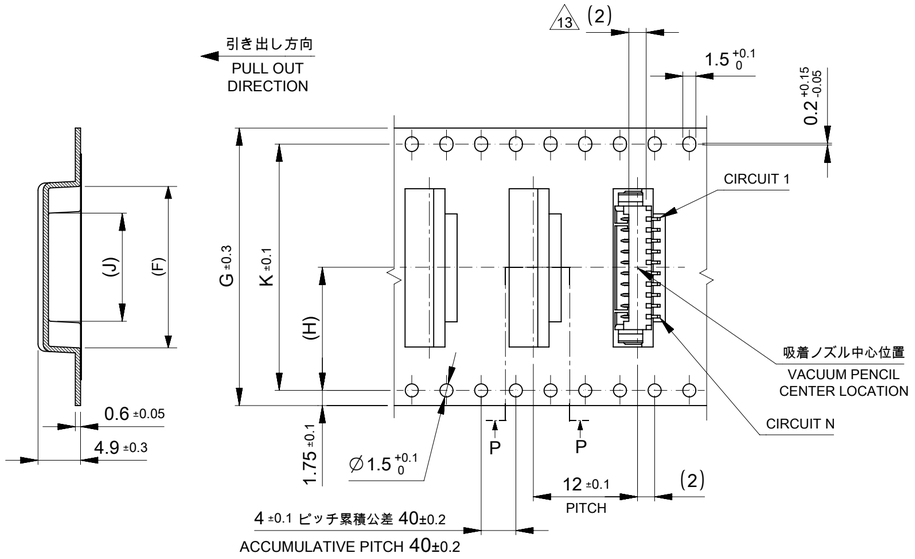

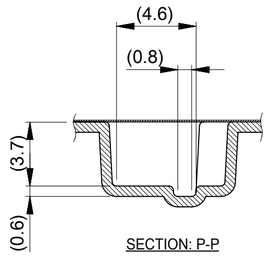

32mm幅キャリアテープ
32mm WIDTH CARRIER TAPE

37.4	33.4	28.4	12.45	14.2	32	18.25	10
M	L	K	J	H	キャリアテープ幅 G CARRIER TAPE WIDTH G	F	極数 CIRCUIT SIZE

THIS DRAWING CONTAINS INFORMATION THAT IS PROPRIETARY TO MOLEX ELECTRONIC TECHNOLOGIES, LLC AND SHOULD NOT BE USED WITHOUT WRITTEN PERMISSION

DIMENSION UNITS	SCALE
mm	NTS

GENERAL TOLERANCES (UNLESS SPECIFIED)

ANGULAR TOL	±	3.0 °
4 PLACES	±	0.2
3 PLACES	±	0.2
2 PLACES	±	0.2
1 PLACE	±	0.2
0 PLACES	±	0.2

DRAFT WHERE APPLICABLE MUST REMAIN WITHIN DIMENSIONS

CURRENT REV DESC:

EC NO: 688261
DRWN: QHE31 2021/12/15
CHK'D: SAKIYAMA 2021/12/21
APPR: KOMURAKAMI 2021/12/24

INITIAL REVISION:
DRWN: QHE31 2021/12/15
APPR: KOMURAKAMI 2021/12/24

THIRD ANGLE PROJECTION | DRAWING: A2-SIZE | SERIES: 53261

molex

PICOBLADE 1.25
SMT RIGHT ANGLE TIN PLATING TYPE

PRODUCT CUSTOMER DRAWING

DOCUMENT NUMBER	DOC TYPE	DOC PART	REVISION
532610001-SD	PSD	000	A

MATERIAL NUMBER	CUSTOMER	SHEET NUMBER
SEE CHART OF SHEET3	GENERAL	4 OF 5

DOCUMENT STATUS	P1	RELEASE DATE	2021/12/24 09:26:44

FORMAT: 11x17-Arch-A2
REVISION: 1.0
DATE: 2018/8/1

△2 適合製品および各種仕様書
APPLICABLE PRODUCTS AND SPECIFICATIONS

梱包仕様書 PACKING SPECIFICATION	PART NUMBER	SPECIFICATION NUMBER
	53261****	SPK-53261-002

適合嵌合相手 MATE WITH	HOUSING	CRIMP TREMINAL		
	51021****	WIRE SIZE (AWG)	PLATING	PART NUMBER
		#26-28	TIN	500798*00
		#28-32		500588*00

製品仕様書 PRODUCT SPECIFICATION	PS-51021-024
アプリケーション仕様書 (取扱説明書) APPLICATION SPECIFICATION	510210001-AS PS 000

THIS DRAWING CONTAINS INFORMATION THAT IS PROPRIETARY TO MOLEX ELECTRONIC TECHNOLOGIES, LLC AND SHOULD NOT BE USED WITHOUT WRITTEN PERMISSION

DIMENSION UNITS	SCALE
mm	NTS

GENERAL TOLERANCES (UNLESS SPECIFIED)

ANGULAR TOL	±	3.0 °
4 PLACES	±	0.2
3 PLACES	±	0.2
2 PLACES	±	0.2
1 PLACE	±	0.2
0 PLACES	±	0.2

DRAFT WHERE APPLICABLE MUST REMAIN WITHIN DIMENSIONS

CURRENT REV DESC:

EC NO: 688261
DRWN: QHE31 2021/12/15
CHK'D: SAKIYAMA 2021/12/21
APPR: KOMURAKAMI 2021/12/24

INITIAL REVISION:
DRWN: QHE31 2021/12/15
APPR: KOMURAKAMI 2021/12/24

molex

PICOBLADE 1.25
SMT RIGHT ANGLE TIN PLATING TYPE

PRODUCT CUSTOMER DRAWING

DOCUMENT NUMBER	DOC TYPE	DOC PART	REVISION
532610001-SD	PSD	000	A

THIRD ANGLE PROJECTION	DRAWING	SERIES	MATERIAL NUMBER	CUSTOMER	SHEET NUMBER
	A3-SIZE	53261		GENERAL	5 OF 5

DOCUMENT STATUS	P1	RELEASE DATE	2021/12/24 09:26:44

FORMAT: master_mod-A3
REVISION: J1
DATE: 2021/05/07

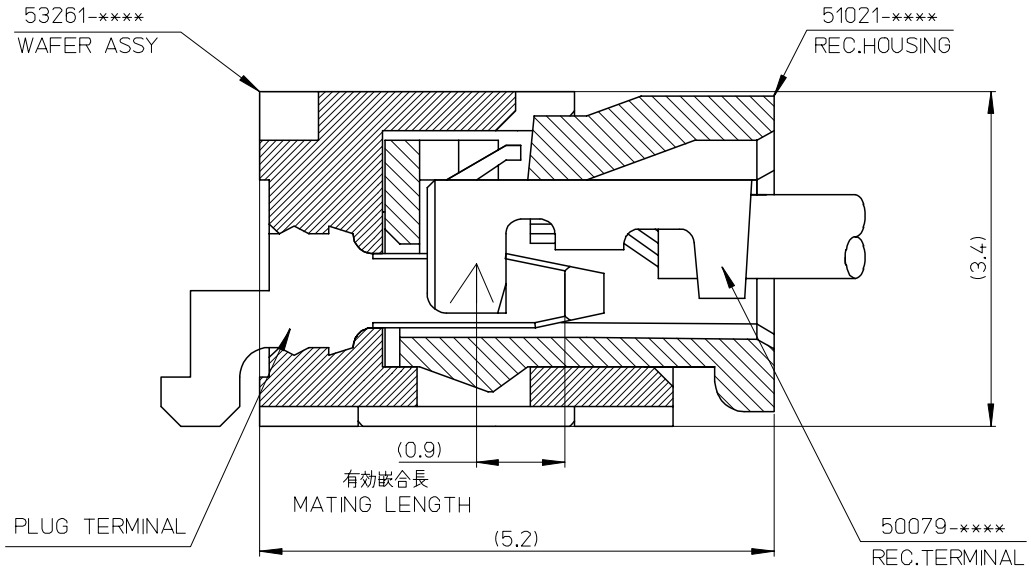

MODEL NO./MATERIAL NO.			
53261-××××	WAFER ASSY		
50079-××××	TERMINAL	REC.	
51021-××××	HOUSING		

RELEASED
EC NO: J2006-2426
DRWN:YAOYAGI 2006/02/02
CHKD:YMAEDA 2006/02/03
APPR:NUKITA 2006/02/07

REV	DESCRIPTION
0	

GENERAL TOLERANCES (UNLESS SPECIFIED)

10 UNDER	±---
10 OVER 30 UNDER	±---
30 OVER	±---
ANGULAR	±--- °

DRAFT WHERE APPLICABLE MUST REMAIN WITHIN DIMENSIONS

DIMENSION STYLE	SCALE	DESIGN UNITS	
MM ONLY	---	METRIC	THIRD ANGLE PROJECTION

DRAWN BY	Y.AOYAGI	DATE 2006/01/30
CHECKED BY	Y.MAEDA	DATE 2006/01/30
APPROVED BY	N.UKITA	DATE 2006/01/30

TITLE
1.25 W-TO-B CONN.
51021,53261
MATING CROSS SECTION

molex MOLEX INCORPORATED

MATERIAL NO.	DOCUMENT NO.	SHEET NO.
SEE CHART	SD-51021-002	1 OF 1

SIZE A3

THIS DRAWING CONTAINS INFORMATION THAT IS PROPRIETARY TO MOLEX INCORPORATED AND SHOULD NOT BE USED WITHOUT WRITTEN PERMISSION