ITEM NO.	PART NUMBER	DESCRIPTION	QTY.	COMPONENT NOTES
1	50-00550	Connector, 4.75x10.2mm SAE, brass nickel plated, molding type	4	
2	30-00792	Wire, 2C TS, 16 AWG, UL2651, 300V, 105C, 4.8 mm, VW-1, PVC, red and black	4	
3	24-00186	Overmold, splitter, Ø 8.0 mm by 10.0x18.0 mm	1	black, 105 °C
4	24-00176	Overmold, SAE connector, PVC, black	4	black, 105 °C
5	55-00059	Dust cap, SAE connector, overmold fit	4	black, 105 °C

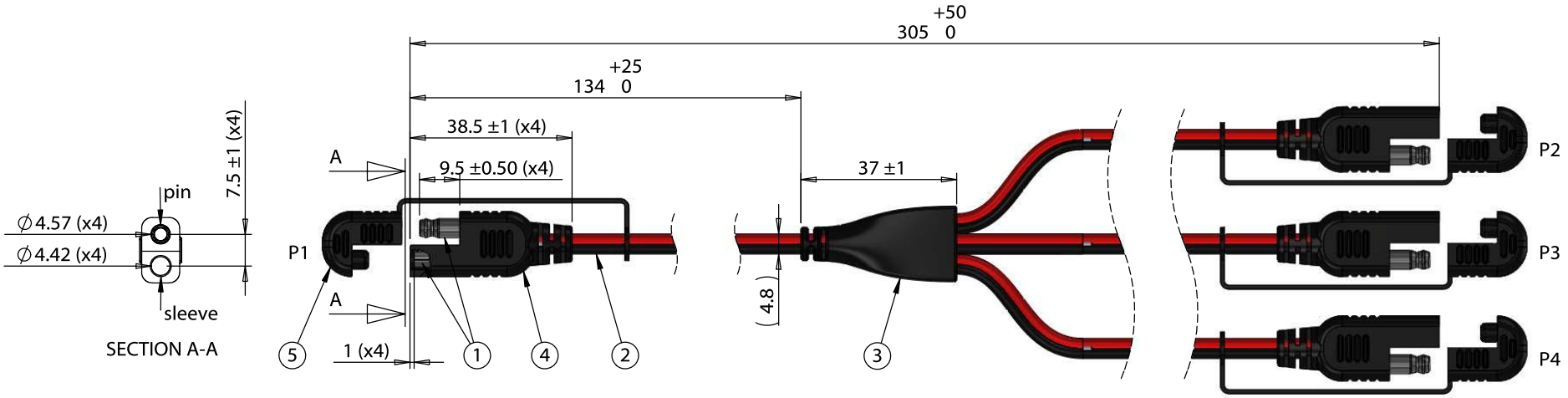

Wiring Diagram		
P1	wire color	P2 & P3 & P4
pin	red (+)	sleeve
sleeve	black (-)	pin

Notes:
Functionally equivalent components may be substituted

Revision:	Date:	Description:
A	1/16/2017	Initial release

Prepared: PS — Digitally signed by PS Date: 2017.08.11 13:48:33 -07'00'

Verified: GL — Digitally signed by GL Date: 2017.08.11 14:14:10 -07'00'

Dimensions are in millimeters.
Tolerances:
X: ± 0.5 mm
X.X: ± 0.3 mm
X.XX: ± 0.05 mm

Notes:

RoHS compliant

Function test: no open, no short circuit, no intermittent

Description:

Cable, 305 mm, 50-00550 SAE to W split to three 50-00550 SAE, 16 AWG, UL2651, 30-00792, caps

TENSILITY
tel 1.541.323.3228 800 877.670.7118
fax 1.541.323.4202 web tensility.com

Size: A
Part number: 10-02411
Scale: 2:3
Sheet 1 of 1

5 4 3 2 1