www.lemo.com

FGG.0T.305.CLAC40

SUMMARY

Wires

Low voltage	**5**



Image is for illustrative purpose only

Series	0T
Termination type	Male solder
IP rating	68
AWG wire size	30.00 - 22.00
Cable Ø	3.60 - 4.00 mm
Status	active
Matching parts	EGG.0T.305.CLL

Download

Request a quote

Eplan

Catalog

TECHNICAL DETAILS

Mechanics

Shell Style/Model	FG*: Straight plug, cable collet
Keying	1 key (alpha=0, plug: male contacts, receptacle: female contacts)
Housing Material	Brass (chrome plated [SAE AMS 2460]) shell and collet nut, nickel plated [SAE AMS QQ N 290] brass latch sleeve and mid pieces
Weight	8.40 g

Performance

Configuration	T.305 : 5 Low Voltage
Insulator	L: PEEK (UL 94 / V-0/1.5)
Rated Current	6.5 Amps

Specifications

Contact Type: Solder
Contact Dia.: 0.7 mm (0.028in)
Bucket Dia.: 0.8 mm (0.031in)
Max. Stranded Conductor: 0.34 mm^2 (AWG 22)
Max. Conductor: 0.34 mm^2 (AWG 22)
R (max): 6.1 mOhm
Vtest (contact-shell): 700 V (AC), 1000 V (DC)
Vtest (contact-contact): 1000 V (AC), 1400 V (DC)

LEMO products and services are provided “as is”. LEMO makes no warranties or representations with regard to LEMO product & services or use of them, express, implied or statutory, including for accuracy, completeness, or security. The user is fully responsible for his products and applications using LEMO components.

Others

Endurance (Shell): >3000 mating cycles
Temp (min / max): -55°C / +200°C
Humidity (max): <=95% [at 60 deg C /140 F]
Resistance to vibration: 15 g [10 Hz - 2000 Hz]
Shock Resistance: 100 g [6 ms]
Climatical Category: 50/175/21
Shielding efficiency (min): 75 dB (at 10 MHz)
Shielding efficiency (min): 40 dB (at 1 GHz)
Salt Spray Corrosion: >1000 hr

DRAWINGS

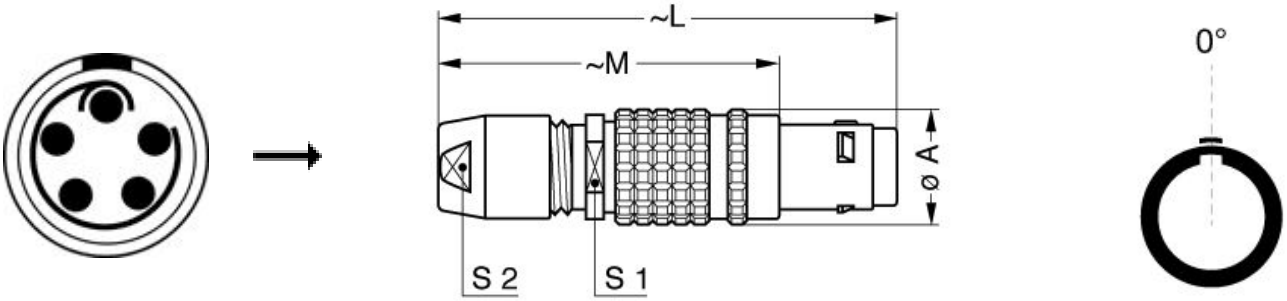

Dimensions

	A	L	M	S1	S2
mm.	9.5	39	29	7.5	7
in.	0,37	1,54	1,14	0,30	0,28

RECOMMENDED BY LEMO

Tools

LEMO products and services are provided “as is”. LEMO makes no warranties or representations with regard to LEMO product & services or use of them, express, implied or statutory, including for accuracy, completeness, or security. The user is fully responsible for his products and applications using LEMO components.

LEMO products and services are provided “as is”. LEMO makes no warranties or representations with regard to LEMO product & services or use of them, express, implied or statutory, including for accuracy, completeness, or security. The user is fully responsible for his products and applications using LEMO components.