SF2395E

1224 MHz SAW Filter

- ***Surface Mount 3.0 x 3.0 mm Package***
- ***Complies with Directive 2002/95/EC (RoHS)***
- ***Moisture Sensitivity Level: 1***
- ***AEC-Q200 Qualified***

RoHS Compliant

Rating	Value	Units
Input Power Level	10	dBm
DC Voltage on any Non-ground Terminal	3	V
Operable Temperature Range	-45 to +125	°C
Specification Temperature Range	-40 to +85	°C
Storage Temperature Range in Tape and Reel	-40 to +85	°C

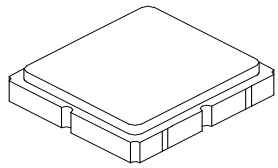

SM3030-6

Electrical Characteristics - -40 to +85°C

Characteristic	Sym	Notes	Min	Typ	Max	Units
Center Frequency	f_C			1224		MHz
Insertion Loss, (1170 to 1278 MHz)	IL			4.4	5.5	dB
Pass Band Ripple, (1170 to 1278 MHz)				2.4	3.5	
Group Delay Variation (1170 to 1278 MHz)				12	30	ns
Return Loss (1170 to 1278 MHz)			6	6.8		dB
Attenuation, Referenced from 0 dB:						
50 to 1025 MHz			18	27		dB
1320 to 2000 MHz			9	18		
Temperature coefficient of frequency				-80		Ppm/°C

Case Style	SM3030-6 3.0 x 3.0 mm Nominal Footprint
Lid Symbolization (Y=year, WW=week, S=shift) dot=pin 1 indicator	7A, YWWS

Electrical Connections

Connection	Terminals
Input	2
Output	5
Case Ground	All others

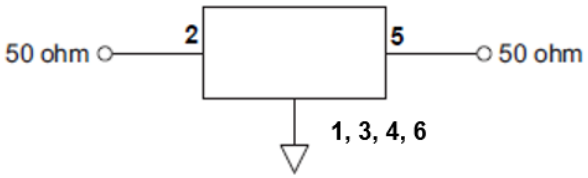

CAUTION: Electrostatic Sensitive Device. Observe precautions for handling.

NOTES:

1. The design, manufacturing process, and specifications of this device are subject to change.
2. US or International patents may apply.
3. RoHS compliant from the first date of manufacture.

© 2015 by RFM Integrated Device, Inc.

Absolute Maximum Ratings - -40 to +105°C

Rating	Value	Units
Input Power Level	10	dBm
DC Voltage on any Non-ground Terminal	3	V
Operable Temperature Range	-45 to +125	°C
Specification Temperature Range	-40 to +105	°C
Storage Temperature Range in Tape and Reel	-40 to +85	°C

Electrical Characteristics - -40 to +105°C

Characteristic	Sym	Notes	Min	Typ	Max	Units
Center Frequency	f_C			1224		MHz
Insertion Loss, (1170 to 1278 MHz)	IL			4.4	5.8	dB
Pass Band Ripple, (1170 to 1278 MHz)				2.4	3.8	
Group Delay Variation (1170 to 1278 MHz)				12	30	ns
Return Loss (1170 to 1278 MHz)			6	6.8		dB
Attenuation, Referenced from 0 dB:						
50 to 1025 MHz			18	27		dB
1320 to 2000 MHz			9	18		
Temperature coefficient of frequency				-80		Ppm/°C

© 2015 by RFM Integrated Device, Inc.

Frequency Characteristics

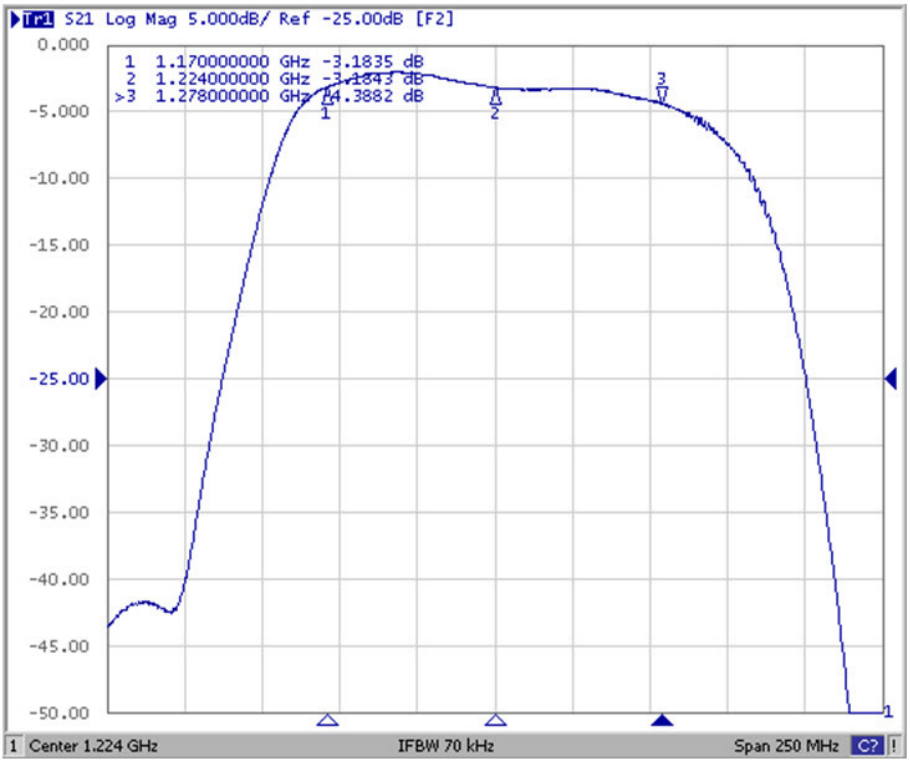

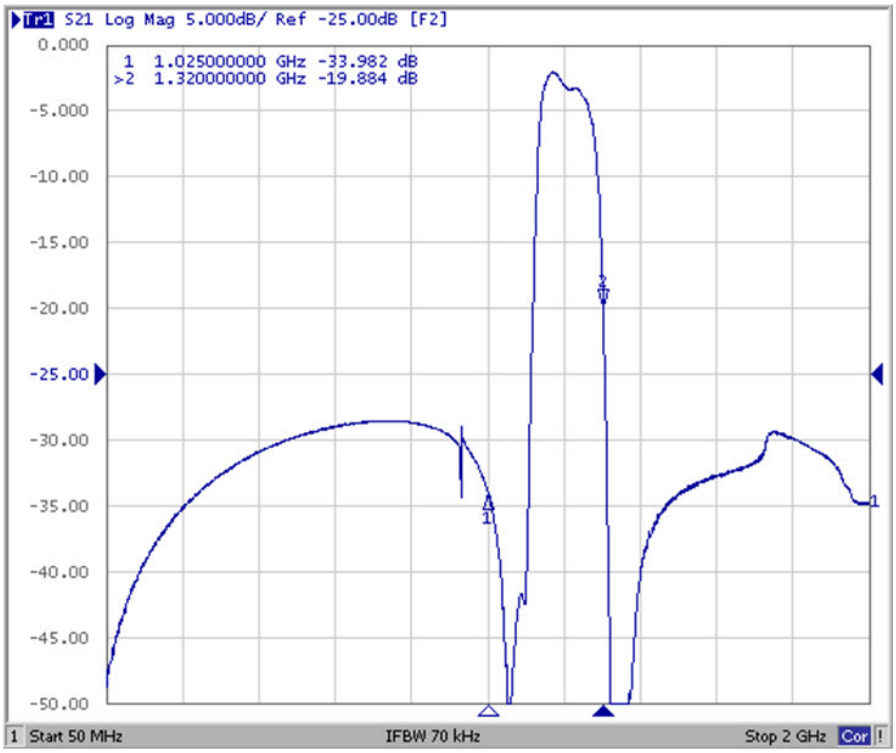

© 2015 by RFM Integrated Device, Inc.

SM3030-6 Case

6-Terminal Ceramic Surface-Mount Case
3.0 X 3.0 mm Nominal Footprint

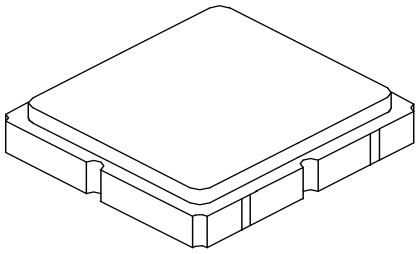

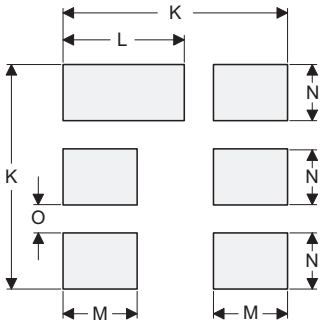

PCB Footprint Top View

Case and PCB Footprint Dimensions

Dimension	mm			Inches		
	Min	Nom	Max	Min	Nom	Max
A	2.99	3.00	3.01	0.117	0.118	0.118
B	2.99	3.00	3.01	0.117	0.118	0.118
C	-	-	1.40	-	-	0.054
D	-	0.90	-	-	0.035	-
E	2.39	2.54	2.69	0.094	0.110	0.105
F	1.45	1.60	1.75	0.057	0.063	0.068
G	0.70	0.85	1.00	0.027	0.033	0.039
H	1.35	1.50	1.65	0.053	0.059	0.064
I	0.45	0.60	0.75	0.017	0.024	0.029
J	1.15	1.30	1.45	0.045	0.051	0.057
K	-	3.20	-	-	0.126	-
L	-	1.70	-	-	0.067	-
M	-	1.05	-	-	0.041	-
N	-	0.81	-	-	0.032	-
O	-	0.38	-	-	0.015	-

Case Materials

Materials	
Solder Pad Plating	0.3 to 1.0 µm Gold over 1.27 to 8.89 µm Nickel
Lid Plating	2.0 to 3.0 µm Nickel
Body	Al_2O_3 Ceramic

TOP VIEW **BOTTOM VIEW**

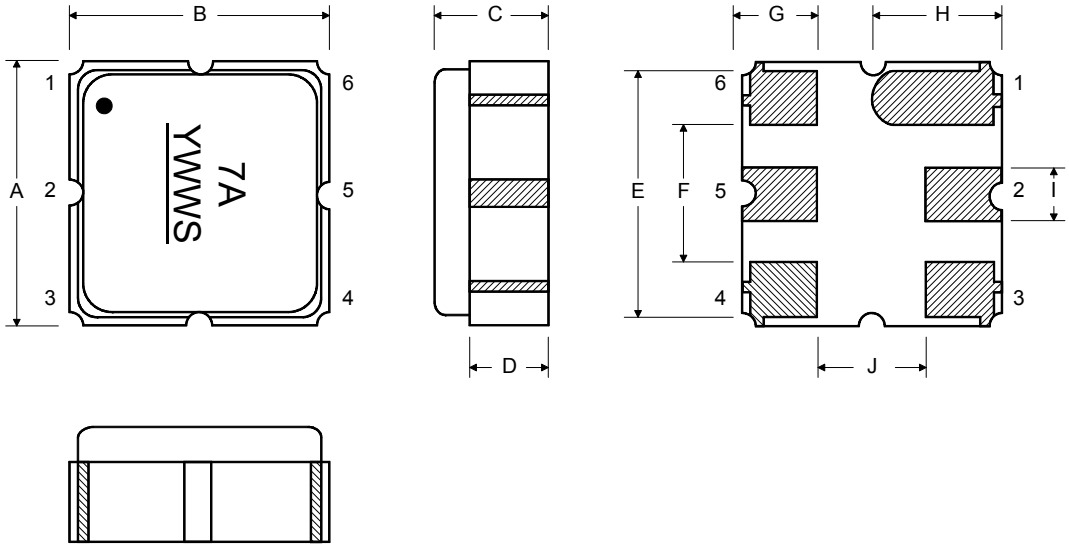

Tape and Reel Specifications

Tape and Reel Standard per ANSI/EIA-481

Reel Count:
7" = 500
13" = 3000

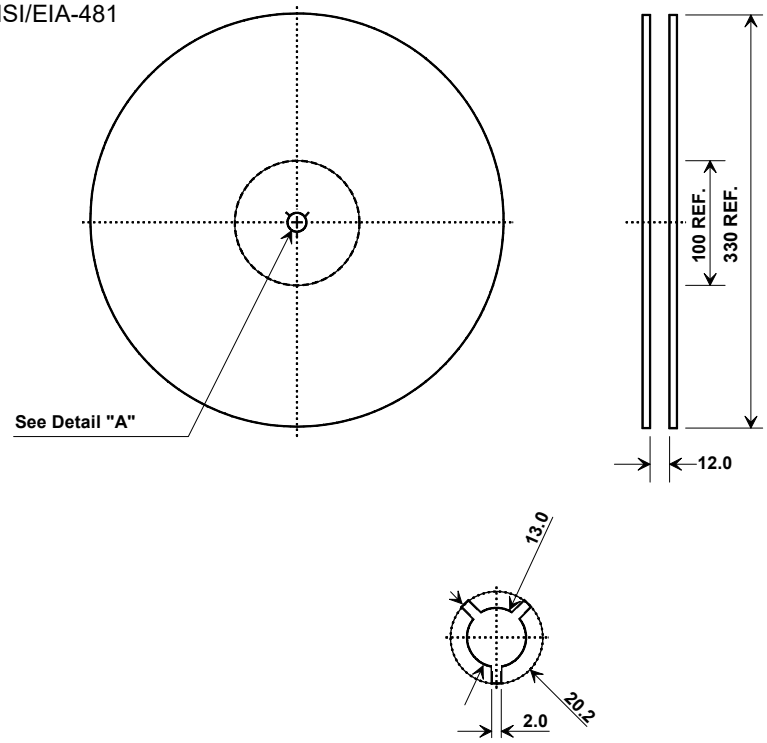

COMPONENT ORIENTATION and DIMENSIONS

Carrier Tape Dimensions	
Ao	3.35 mm
Bo	3.35 mm
Ko	1.40 mm
Pitch	8.0 mm
W	12.0 mm

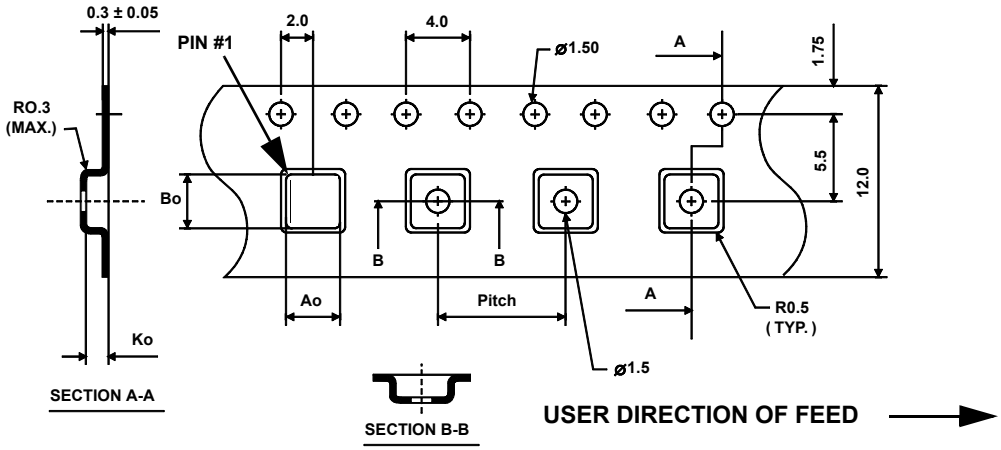

Recommended Reflow Profile
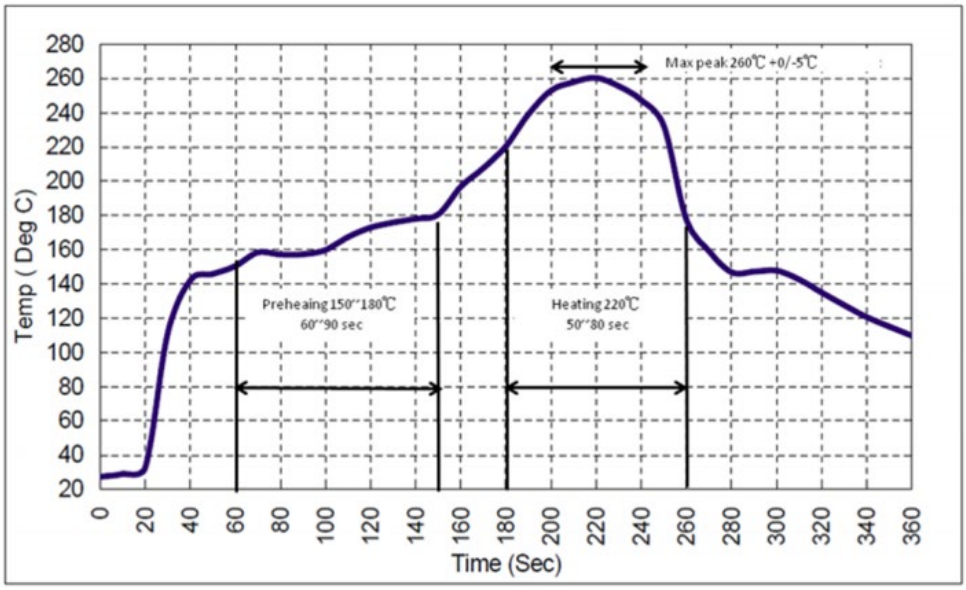
1. Preheating shall be fixed at 150~180ºC for 60~90 seconds.
2. Ascending time to preheating temperature 150ºC shall be 30 seconds min.
3. Heating shall be fixed at 220ºC for 50~80 seconds and at 260ºC +0/-5ºC peak (10 seconds).
4. Time: 5 times maximum.