42 V Input Power Management IC with Battery Voltage Detector for Automotive Applications

No.EC-501-210219

OVERVIEW

The R5117x is a Power Management IC designed for automotive applications, featuring input voltage range from 3.5V to 42V. This IC includes Battery Voltage Detector, SENSE Voltage Detector and 500 mA Voltage Regulator in a single chip.

KEY BENEFITS

- Reducing components and improving functional safety
- The Battery Voltage Detector suitable for Early Warning System against battery voltage reduction
- Preventing the false detection of transient characteristic fluctuations by high-speed response Voltage Regulator

KEY SPECIFICATIONS

- Input Voltage Range (Max. rating):
  3.5 V to 42.0 V (50.0 V)
- Supply Current: Typ. 35 µA

Voltage Regulator (VR)

- Output Voltage Range: 3.3 V to 5.0 V
- Output Voltage Accuracy:
  -1.25% to 0.75%(−40°C ≤Ta≤ 125°C)
- Output Current: 500 mA
- Protection:
  Thermal shutdown (Detection Temp. Typ.175 °C)
  Output current (Typ.750 mA)
  Output short-circuit (Typ.105 mA)

SENSE Voltage Detector (SVD)

- Detector Threshold : 2.5 V to 5.0 V (in 0.01V step)
- Detector Threshold Accuracy :
  -1.25% to 0.75%(−40°C ≤Ta≤ 125°C)
- Release hysteresis: max 0.7%

Battery Voltage Detector (BVD)

- Detector Threshold : 3.5 V to 12.0 V (in 0.1V step)
- Detector Threshold Accuracy :
  -2.0% to 1.0% (−40°C ≤Ta≤ 125°C)
- Release hysteresis: max 5.0%

PACKAGES

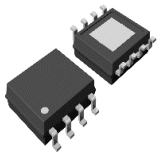

HSOP-8E
5.2 x 6.2 x 1.45 (mm)

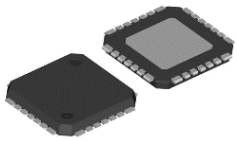

HQFN0808-28
8.8 x 8.8 x 0.95 (mm)

TYPICAL APPLICATIONS

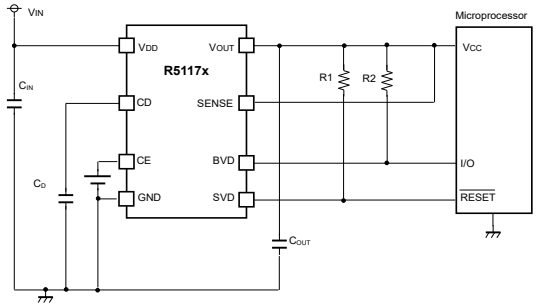

- C_{IN}: 1.0µF, C_{OUT}: 10µF, Ceramic capacitors
- C_D: Ceramic capacitors for setting detection delay time

SELECTION GUIDE

Product Name	Package	Quantity per Reel
R5117SxxxA-E2-#E	HSOP-8E	1,000 pcs
R5117LxxxA-TR-#E	HQFN0808-28	2,000 pcs

xxx: Specify the set output voltage for VR (V_{VRSET}), the set Battery voltage detector threshold (V_{BVSET}) and the set SENSE voltage detector threshold (V_{SVSET}) by using serial numbers starting from 001

Refer to ELECTRICAL CHARACTERISTICS for detail information.

APPLICATIONS

- Power supply system with microprocessor devices for In-Vehicle electrical equipment
- Power supply system for electronic control units such as EV inverter and battery charge control unit

SELECTION GUIDE

The set output voltages and the quality class are user-selectable options.

Product Name	Package	Quantity per Reel	Pb Free	Halogen Free
R5117SxxxA-E2-#E	HSOP-8E	1,000 pcs	Yes	Yes
R5117LxxxA-TR-#E	HQFN0808-28	2,000 pcs	Yes	Yes

xxx: Specify the set output voltage for Voltage Regulator (V_{VRSET}),
the set Battery voltage detector threshold (V_{BVSET}) and the set SENSE voltage detector threshold (V_{SVSET}) by using serial numbers starting from 001[(1)]
Refer to ELECTRICAL CHARACTERISTICS for detail information

#: Select the quality class

	Operating Temperature Range	Test Temperature
A	−40°C to 125°C	25°C, High
K	−40°C to 125°C	Low, 25°C, High

[(1)] The combinations of V_{VRSET}, V_{BVSET}, V_{SVSET} are following conditions;
- V_{VRSET} = 3.3 V to 5.0 V
- V_{BVSET} = 3.5 V to 12.0 V
- V_{SVSET} = 2.5 V to 5.0 V

BLOCK DIAGRAM

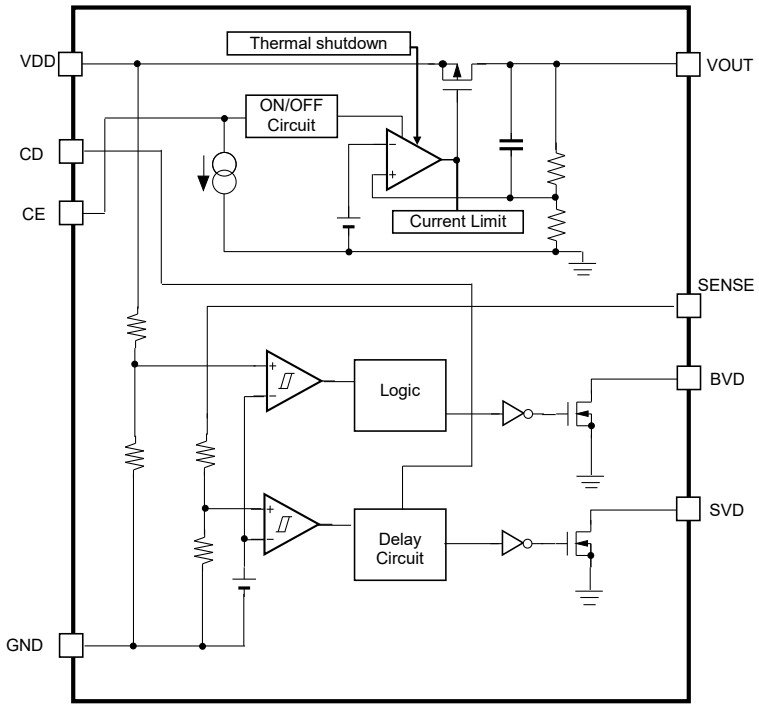

R5117xxx Block Diagram

PIN DESCRIPTION

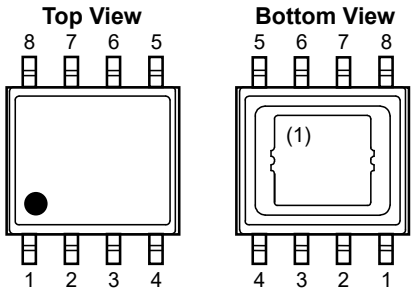

R5117S (HSOP-8E) Pin Configuration

R5117S (HSOP-8E)

Pin No.	Symbol	Description
1	VDD	Supply Voltage Pin
2	CD	Pin for setting VD Release Output Delay Time (power-on reset time)
3	CE	Chip Enable Pin (Active-high)
4	GND	Ground Pin
5	SVD	SENSE Voltage Reduction Detection Output Pin (“Low” at detection)
6	BVD	Battery Voltage Reduction Detection Output Pin (“Low” at detection)
7	SENSE	SENSE Input Voltage Pin
8	VOUT	Regulator Output Pin

(1) The tab on the bottom of the package is substrate level (GND). It is recommended that the tab be connected to the ground plane on the board.

Top View Bottom View

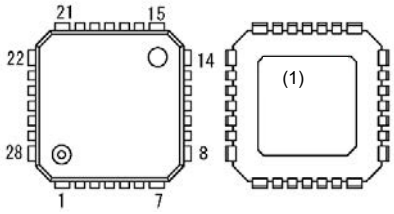

R5117L(HQFN0808-28) Pin Configuration

R5117L(HQFN0808-28)

Pin No.	Symbol	Description
1	Tab (GND)	Tab ※Internally shorted to the GND
2	NC	No Connection
3	VDD	Power Supply Pin ※Internally shorted to the 4Pin
4	VDD	Power Supply Pin ※Internally shorted to the 3Pin
5	NC	No Connection
6	CD	Voltage Detector Reset Delay Time (Power-on Reset Time) Setting Pin
7	Tab (GND)	Tab ※Internally shorted to the GND
8	Tab (GND)	Tab ※Internally shorted to the GND
9	CE	Chip Enable Pin, Active-high
10	NC	No Connection
11	GND	Ground Pin ※Internally shorted to the 12Pin
12	GND	Ground Pin ※Internally shorted to the 11Pin
13	NC	No Connection
14	Tab (GND)	Tab ※Internally shorted to the GND
15	Tab (GND)	Tab ※Internally shorted to the GND
16	SVD	SENSE Voltage Reduction Detection Output Pin (“Low” at detection)
17	BVD	Battery Voltage Reduction Detection Output Pin (“Low” at detection)
18	NC	No Connection
19	SENSE	SENSE Pin
20	VOUT	Voltage Regulator Output Pin
21	Tab (GND)	Tab ※Internally shorted to the GND
22	Tab (GND)	Tab ※Internally shorted to the GND
23	NC	No Connection
24	NC	No Connection
25	NC	No Connection
26	NC	No Connection
27	NC	No Connection
28	Tab (GND)	Tab ※Internally shorted to the GND

(1) The tab on the bottom of the package is substrate level (GND). It is recommended that the tab be connected to the ground plane on the board.

PIN EQUIVALENT CIRCUIT DIAGRAMS

< VOUT Pin >

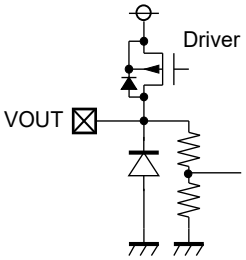

< CE Pin >

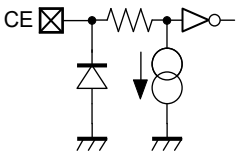

< CD Pin >

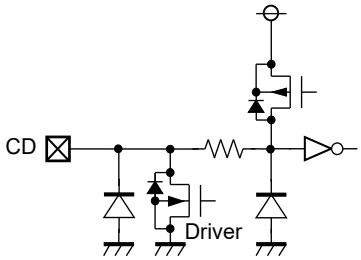

< BVD Pin >

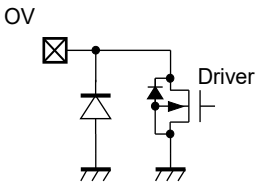

< SVD Pin >

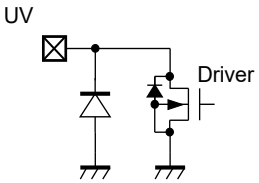

< SENSE Pin >

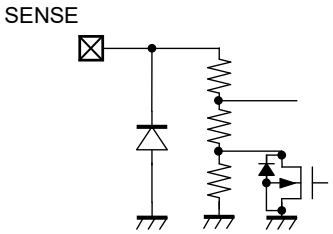

ABSOLUTE MAXIMUM RATINGS

Symbol	Parameter	Rating	Unit
V_{IN}	Input Voltage	−0.3 to 50	V
	Peak Input Voltage (1)	60	V
V_{CE}	CE Pin Input Voltage	−0.3 to 50	V
V_{OUT}	Output Voltage	−0.3 to V_{IN} + 0.3 ≤ 50	V
V_{SENSE}	SENSE Pin Voltage	−0.3 to 50	V
V_{CD}	CD Pin Output Voltage	−0.3 to 50	V
V_{BVD}	BVD Pin Output Voltage	−0.3 to 7.0	V
V_{SVD}	SVD Pin Output Voltage	−0.3 to 7.0	V
P_D	Power Dissipation	Refer to Appendix “Power Dissipation”	
Tj	Junction Temperature	−40 to 150	°C
Tstg	Storage Temperature	−55 to 150	°C

ABSOLUTE MAXIMUM RATINGS

Electronic and mechanical stress momentarily exceeded absolute maximum ratings may cause permanent damage and may degrade the lifetime and safety for both device and system using the device in the field. The functional operation at or over these absolute maximum ratings are not assured.

RECOMMENDED OPERATING CONDITIONS

Symbol	Parameter	Rating	Unit
V_{IN}	Input Voltage	3.5 to 42	V
V_{CE}	CE Pin Input Voltage	0 to 42	V
V_{SENSE}	SENSE Pin Input Voltage	0 to 6.0	V
V_{BVD}	BVD Pin Output Voltage	0 to 6.0	V
V_{SVD}	SVD Pin Output Voltage	0 to 6.0	V
Ta	Operating Temperature	−40 to 125	°C

RECOMMENDED OPERATING CONDITIONS

All of electronic equipment should be designed that the mounted semiconductor devices operate within the recommended operating conditions. The semiconductor devices cannot operate normally over the recommended operating conditions, even if they are used over such conditions by momentary electronic noise or surge. And the semiconductor devices may receive serious damage when they continue to operate over the recommended operating conditions.

(1) Duration time: 200 ms

ELECTRICAL CHARACTERISTICS

C_{IN} = 1.0 µF, C_{OUT} = 10 µF, V_{IN} = 14 V, unless otherwise noted.
The specifications surrounded by ☐ are guaranteed by design engineering at −40°C ≤ Ta ≤ 125°C.

R5117xxxx-AE

For All (Ta = 25°C)

Symbol	Parameter	Condition		Min.	Typ.	Max.	Unit
I_{SS}	Supply Current	I_{OUT} = 0 mA (1)	3.5V ≤ V_{BVSET} < 8.0V		35	65	µA
			8.0V ≤ V_{BVSET} ≤ 12.0V			60	
Istandby	Standby Current	V_{IN} = 14 V, V_{CE} = 0 V (1)			10	25	µA
I_{PD}	CE Pull-down Current				0.2	0.6	µA
V_{CEH}	CE Input Voltage, high			2.0		42	V
V_{CEL}	CE Input Voltage, low			0		1.0	V

All test items listed under Electrical Characteristics are done under the pulse load condition (Tj ≈ Ta = 25°C).

VR Section (Ta = 25°C)

Symbol	Parameter	Condition		Min.	Typ.	Max.	Unit
V_{OUT}	Output Voltage	V_{IN} = 14 V, I_{OUT} = 1 mA	Ta = 25°C	×0.995		×1.005	V
			−40°C ≤ Ta ≤ 125°C	×0.9875		×1.0075	
ΔV_{OUT}/ ΔI_{OUT}	Load Regulation	V_{IN} = V_{SET} + 3.0 V	1 mA ≤ I_{OUT} ≤ 300 mA	−10	0	10	mV
			1 mA ≤ I_{OUT} ≤ 500 mA	−15		15	
V_{DIF}	Dropout Voltage	I_{OUT} = 500 mA	V_{SET} = 3.3 V		1.1	1.7	V
			V_{SET} = 5.0 V		0.9	1.5	
ΔV_{OUT}/ ΔV_{IN}	Line Regulation	I_{OUT} = 1 mA	8.0 V ≤ V_{IN} ≤ 16 V	−10	0	10	mV
			6.0 V ≤ V_{IN} ≤ 32 V	-25		25	
I_{LIM}	Output Current Limit	V_{IN} = 8.0 V		500	750		mA
I_{SC}	Short Current Limit	V_{OUT} = 0 V		70	105	150	mA
T_{TSD}	Thermal Shutdown Temperature	Junction Temperature		165	175		°C
T_{TSR}	Thermal Shutdown Release Temperature	Junction Temperature		125	145		°C

All test items listed under Electrical Characteristics are done under the pulse load condition (Tj ≈ Ta = 25°C).

(1) Supply current, Standby current are depending on VDD Voltage and battery voltage detector setting when the detector power is turned on all the time. Refer to the Supply Current data in TYPICAL CHARACTERISTICS for detail information.

ELECTRICAL CHARACTERISTICS

C_{IN} = 1.0 µF, C_{OUT} = 10 µF, V_{IN} = 14 V, unless otherwise noted.
The specifications surrounded by ☐ are guaranteed by design engineering at −40°C ≤ Ta ≤ 125°C.

SVD / BVD Sections (Ta = 25°C)

Symbol	Parameter	Condition	Min.	Typ.	Max.	Unit
V_{BVDET}	Battery Voltage Detector Threshold	Ta = 25°C	×0.992		×1.008	V
		−40°C ≤ Ta ≤ 125°C	×0.98		×1.01	
V_{SVDET}	SENSE Voltage Detector Threshold	Ta = 25°C	×0.995		×1.005	V
		−40°C ≤ Ta ≤ 125°C	×0.9875		×1.0075	
V_{BVHYS}	Battery Voltage Threshold Hysteresis		V_{BVDET} ×0.01	V_{BVDET} ×0.03	V_{BVDET} ×0.05	V
V_{SVHYS}	SENSE Voltage Detector Threshold Hysteresis		V_{SVDET} ×0.003	V_{SVDET} ×0.005	V_{SVDET} ×0.007	V
t_{DELAY}	Release Output Delay Time (Power-on Reset)	C_D = 10 nF (1)	2	4	8	ms
V_{UVLO}	UVLO Detector Threshold			1.8	2.8	V
$V_{UVLOHYS}$	UVLO Detector Threshold Hysteresis			0.1	0.2	V
V_{BVD}	BVD Pull-up Voltage				6.0	V
V_{SVD}	SVD Pull-up Voltage				6.0	V
I_{OUTBVD}	Nch Output Current (BVD Output Pin)	V_{IN} = V_{BVDET} – 0.1V, V_{DS} = 0.1 V	0.8	2.0		mA
I_{OUTSVD}	Nch Output Current (SVD Output Pin)	V_{IN} = 3.0 V, V_{DS} = 0.1 V	0.8	2.0		mA
$I_{LEAKBVD}$	Nch Leakage Current (BVD Output Pin)	V_{BVD} = 5.5 V			0.3	µA
$I_{LEAKSVD}$	Nch Leakage Current (SVD Output Pin)	V_{SVD} = 5.5 V			0.3	µA
R_{LCD}	C_D Pin Discharge Nch Tr.ON Resistance	V_{CE} = 0 V, V_{CD} = 0.1 V		1.2	3.0	kΩ

All test items listed under Electrical Characteristics are done under the pulse load condition (Tj ≈ Ta = 25°C).

(1) t_{DELAY} is adjustable by only C_D of SENSE Voltage Detector. t_{DELAY} of Battery Voltage Detector is fixed internally. Refer to Release delay time data in TYPICAL CHARACTERISTICS for detail information.

ELECTRICAL CHARACTERISTICS

C_{IN} = 1.0 µF, C_{OUT} = 10 µF, V_{IN} = 14 V, unless otherwise noted.

R5117xxxx-KE

For All (−40°C ≤ Ta ≤ 125°C)

Symbol	Parameter	Condition		Min.	Typ.	Max.	Unit
I_{SS}	Supply Current	I_{OUT} = 0 mA (1)	3.5V ≤ V_{BVDET} < 8.0V		35	65	µA
			8.0V ≤ V_{BVDET} ≤ 12.0V			60	
Istandby	Standby Current	V_{IN} = 14 V, V_{CE} = 0 V (1)			10	25	µA
I_{PD}	CE Pull-down Current				0.2	0.6	µA
V_{CEH}	CE Input Voltage, high			2.0		42	V
V_{CEL}	CE Input Voltage, low			0		1.0	V

VR Section (−40°C ≤ Ta ≤ 125°C)

Symbol	Parameter	Condition		Min.	Typ.	Max.	Unit
V_{OUT}	Output Voltage	V_{IN} =14 V, I_{OUT} = 1 mA	Ta = 25°C	×0.995		×1.005	V
			−40°C ≤ Ta ≤ 125°C	×0.9875		×1.0075	
ΔV_{OUT}/ ΔI_{OUT}	Load Regulation	V_{IN} = V_{SET} + 3.0 V	1 mA ≤ I_{OUT} ≤ 300 mA	−10	0	10	mV
			1 mA ≤ I_{OUT} ≤ 500 mA	−15		15	
V_{DIF}	Dropout Voltage	I_{OUT} = 500 mA	V_{SET} = 3.3 V		1.1	1.7	V
			V_{SET} = 5.0 V		0.9	1.5	
ΔV_{OUT}/ ΔV_{IN}	Line Regulation	I_{OUT} = 1 mA	8.0 V ≤ V_{IN} ≤ 16 V	−10	0	10	mV
			6.0 V ≤ V_{IN} ≤ 32 V	-25		25	
I_{LIM}	Output Current Limit	V_{IN} = 8.0 V		500	750		mA
I_{SC}	Short Current Limit	V_{OUT} = 0 V		70	105	150	mA
T_{TSD}	Thermal Shutdown Temperature	Junction Temperature		165	175		°C
T_{TSR}	Thermal Shutdown Release Temperature	Junction Temperature		125	145		°C

(1) Supply current, Standby current are depending on VDD Voltage and battery voltage detector setting when the detector power is turned on all the time. Refer to the Supply Current data in TYPICAL CHARACTERISTICS for detail information.

ELECTRICAL CHARACTERISTICS

C_{IN} = 1.0 µF, C_{OUT} = 10 µF, V_{IN} = 14 V, unless otherwise noted.

SVD / BVD Sections (−40°C ≤ Ta ≤ 125°C)

Symbol	Parameter	Condition	Min.	Typ.	Max.	Unit
V_{BVDET}	Battery Voltage Detector Threshold	Ta = 25°C	×0.992		×1.008	V
		−40°C ≤ Ta ≤ 125°C	×0.98		×1.01	
V_{SVDET}	SENSE Voltage Detector Threshold	Ta = 25°C	×0.995		×1.005	V
		−40°C ≤ Ta ≤ 125°C	×0.9875		×1.0075	
V_{BVHYS}	Battery Voltage Detector Threshold Hysteresis		V_{BVDET} ×0.01	V_{BVDET} ×0.03	V_{BVDET} ×0.05	V
V_{SVHYS}	SENSE Voltage Detector Threshold Hysteresis		V_{SVDET} ×0.003	V_{SVDET} ×0.005	V_{SVDET} ×0.007	V
t_{DELAY}	Release Output Delay Time (Power-on Reset)	C_D = 10 nF (1)	2	4	8	ms
V_{UVLO}	UVLO Detector Threshold			1.8	2.8	V
$V_{UVLOHYS}$	UVLO Detector Threshold Hysteresis			0.1	0.2	V
V_{BVD}	BVD Pull-up Current				6.0	V
V_{SVD}	SVD Pull-up Current				6.0	V
I_{OUTBVD}	Nch Output Current (BVD Output Pin)	V_{IN} = V_{BVDET} – 0.1V, V_{DS} = 0.1 V	0.8	2.0		mA
I_{OUTSVD}	Nch Output Current (SVD Output Pin)	V_{IN} = 3.0 V, V_{DS} = 0.1 V	0.8	2.0		mA
$I_{LEAKBVD}$	Nch Leakage Current (BVD Output Pin)	V_{BVD} = 5.5 V			0.3	µA
$I_{LEAKSVD}$	Nch Leakage Current (SVD Output Pin)	V_{SVD} = 5.5 V			0.3	µA
R_{LCD}	C_D Pin Discharge Nch Tr.ON Resistance	V_{CE} = 0 V, V_{CD} = 0.1 V		1.2	3.0	kΩ

(1) t_{DELAY} is adjustable by only C_D of SENSE Voltage Detector. t_{DELAY} of Battery Voltage Detector is fixed internally. Refer to Release delay time data in TYPICAL CHARACTERISTICS for detail information.

R5117x (-AE) Product-specific Electrical Characteristics

The specifications surrounded by [ ] are guaranteed by design engineering at −40°C ≤ Ta ≤ 125°C

Product Name	V_{OUT}			V_{OUT}		
	Ta=25°C			-40°C ≤ Ta ≤ 125°C		
	Min.	Typ.	Max.	Min.	Typ.	Max.
R5117x001A	4.975	5.000	5.025	[4.938]	5.000	[5.037]
R5117x002A	3.284	3.300	3.316	[3.259]	3.300	[3.324]

Product Name	V_{BVDET}			V_{BVDET}			V_{BVHYS}		
	Ta=25°C			-40°C ≤ Ta ≤ 125°C			Ta=25°C		
	Min.	Typ.	Max.	Min.	Typ.	Max.	Min.	Typ.	Max.
R5117x001A	6.647	6.700	6.753	[6.566]	6.700	[6.767]	[0.06700]	0.20100	[0.33500]
R5117x002A	5.159	5.200	5.241	[5.096]	5.200	[5.252]	[0.05200]	0.15600	[0.26000]

Product Name	V_{SVDET}			V_{SVDET}			V_{SVHYS}		
	Ta=25°C			-40°C ≤ Ta ≤ 125°C			Ta=25°C		
	Min.	Typ.	Max.	Min.	Typ.	Max.	Min.	Typ.	Max.
R5117x001A	4.796	4.820	4.844	[4.760]	4.820	[4.856]	[0.01446]	0.02410	[0.03374]
R5117x002A	3.165	3.180	3.195	[3.141]	3.180	[3.203]	[0.00954]	0.01590	[0.02226]

R5117x (-KE) Product-specific Electrical Characteristics

Product Name	V_{OUT}			V_{OUT}		
	Ta=25°C			-40°C ≤ Ta ≤ 125°C		
	Min.	Typ.	Max.	Min.	Typ.	Max.
R5117x001A	4.975	5.000	5.025	4.938	5.000	5.037
R5117x002A	3.284	3.300	3.316	3.259	3.300	3.324

Product Name	V_{BVDET}			V_{BVDET}			V_{BVHYS}		
	Ta=25°C			-40°C ≤ Ta ≤ 125°C			Ta=25°C		
	Min.	Typ.	Max.	Min.	Typ.	Max.	Min.	Typ.	Max.
R5117x001A	6.647	6.700	6.753	6.566	6.700	6.767	0.06700	0.20100	0.33500
R5117x002A	5.159	5.200	5.241	5.096	5.200	5.252	0.05200	0.15600	0.26000

Product Name	V_{SVDET}			V_{SVDET}			V_{SVHYS}		
	Ta=25°C			-40°C ≤ Ta ≤ 125°C			Ta=25°C		
	Min.	Typ.	Max.	Min.	Typ.	Max.	Min.	Typ.	Max.
R5117x001A	4.796	4.820	4.844	4.760	4.820	4.856	0.01446	0.02410	0.03374
R5117x002A	3.165	3.180	3.195	3.141	3.180	3.203	0.00954	0.01590	0.02226

THEORY OF OPERATION

Thermal Shutdown

When the junction temperature of this device exceeds 175°C (Typ.), the built-in thermal shutdown circuit stops the regulator operation. After that, when the temperature drops to 145°C (Typ.) or lower, the regulator restarts the operation. Unless eliminating the overheating problem, the regulator turns on and off repeatedly and a pulse shaped output voltage occurs as result.

R5117xxx Voltage Detector

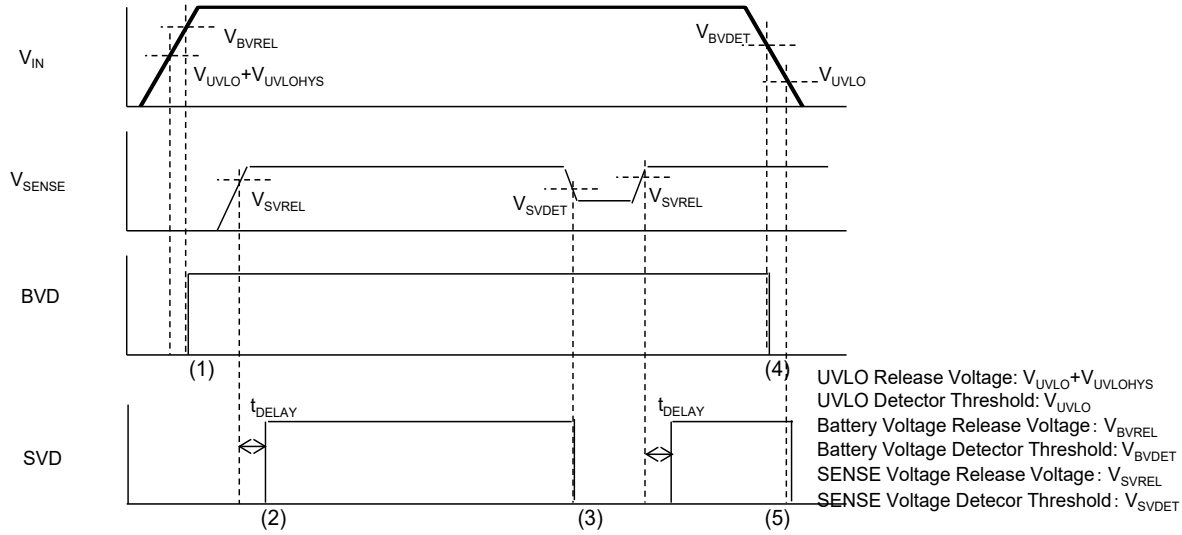

R5117xxx Voltage Detector Timing Chart

(1) When the Input pin voltage (V_{IN}) exceed the Battery voltage release voltage (V_{BVREL}), the BVD pin output becomes “High” after the release delay time (Typ. 20μs).

(2) When SENSE pin voltage (V_{SENSE}) exceed the SENSE voltage release voltage (V_{SVREL}), the SVD pin output becomes “High” after the release delay time (t_{DELAY}).

(3) When V_{SENSE} decreases less than the SENSE voltage detector threshold (V_{SVDET}), the SVD pin output becomes “Low” after the detection delay time (Typ.100 μs) and enters the SENSE voltage detecting state.

(4) When the Input pin voltage (V_{IN}) decreases less than the Battery voltage detector threshold (V_{BVDET}), the BVD pin output becomes “Low” after the detection delay time (Typ.6.0μs) and enters the Battery voltage detecting state.

(5) When the Input pin voltage (V_{IN}) decreases less than the UVLO detector threshold (V_{UVLO}), the SVD pin output becomes “Low”.

SENSE Voltage Monitoring VD Delay Operation and Release Delay Time (t_{DELAY})

At SENSE Voltage Detection

When supplying a voltage higher than the SENSE voltage release voltage (V_{SVREL}) to the SENSE pin, a charging to an external capacitor starts and the CD pin voltage (V_{CD}) increases. The SVD pin voltage (V_{SVD}) maintains "Low" until V_{CD} reaches the CD pin threshold voltage (V_{TCD}). When V_{CD} exceeds V_{TCD}, V_{SVD} is inverted from "Low" to "High". The release delay time (t_{DELAY}) is the period from the time the SENSE pin voltage (V_{SENSE}) exceeds V_{SVREL} to a rising edge of V_{SVD}. When the output voltage turns from "Low" to "High", a charge carrier of the external capacitor starts discharging. When supplying a voltage lower than the SENSE voltage detector threshold (V_{SVDET}) to the SENSE pin, the detection delay time (t_{PHL}) remains constant independently of the external capacitor. t_{PHL} is the period that V_{SVD} is inverted from "High" to "Low".

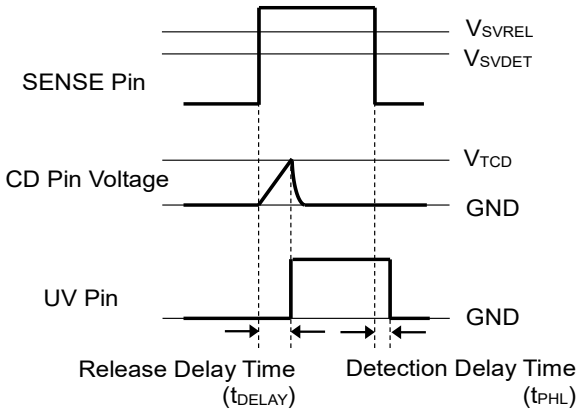

SENSE Voltage Release Delay Timing Diagram

Calculation of SENSE Voltage Release Delay Time

The following equation can calculate a typical value of the release delay time (t_{DELAY}) with using the external capacitor (C_D).

$$t_{DELAY}\,(s) = 0.72 \times C_D\,(F) / (1.8 \times 10^{-6})$$

t_{DELAY} is the period from supplying a pulse voltage of "1.0 V to (V_{SVDET}) + 1.0 V" to the SENSE pin by pulling-up SVD pin to 5 V with 100 kΩ resistor to the SVD pins reached 2.5 V.

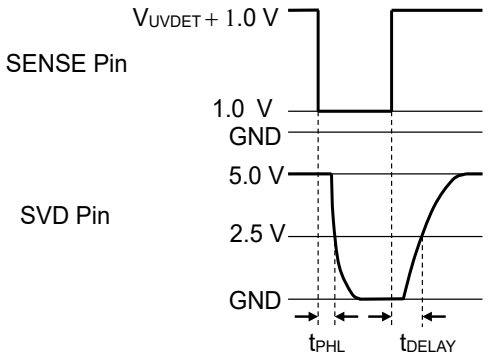

Voltage Setting of Voltage Regulator

The SENSE Voltage Detector (SVD) detects the drop and rise of the Voltage Regulator (VR). When the SENSE release voltage is set to a voltage above the VR output voltage, the reset signal of SVD is not released even if SVD monitors the VR output voltage returns to the normal value after detecting the drop of VR.
To prevent this issue, the following conditions are required between V_{OUT} and V_{SVREL}.

(VR Set Output Voltage) x 0.9875 − 15 mV* > (SENSE Set Detector Threshold) x 1.0075 x 1.007
* 15mV is the worst value of load regulation

When using a device without the above conditions of V_{OUT} and V_{SVDET}, careful consideration must be given to the system operation before use.

APPLICATION INFORMATION

TYPICAL APPLICATIONS

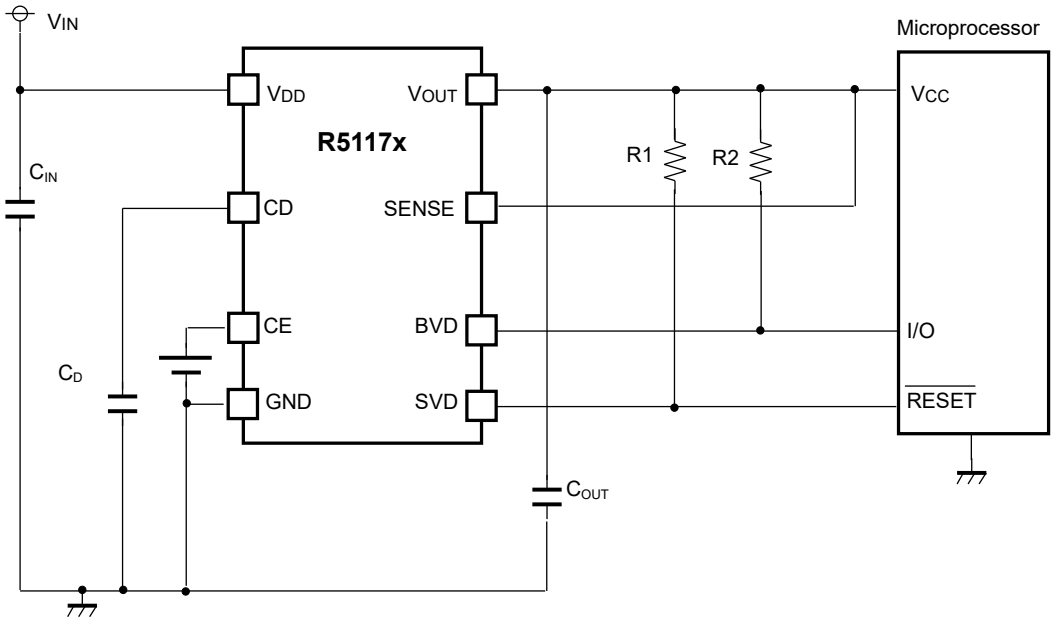

R5117xxx TYPICAL APPLICATIONS

Recommended Components

Symbol	Description
C_{IN}	Ceramic Capacitor, 1.0 µF or more, 50V Rated Voltage, CGA4J2X7R1H104K, TDK
C_{OUT}	Ceramic Capacitor, 10 µF or more, 50V Rated Voltage, CGA4J1X7R0J106K, TDK
C_D	A capacitor corresponding to setting of Release Output Delay Time
R1/R2	A resistor covering the output current at Nch. driver ON and the leakage current at Nch. driver OFF. Refer to “Electrical Characteristic” providing the evaluation result with using a resistor of 100kΩ.

TYPICAL APPLICATION FOR IC CHIP BREAKDOWN PREVENTION

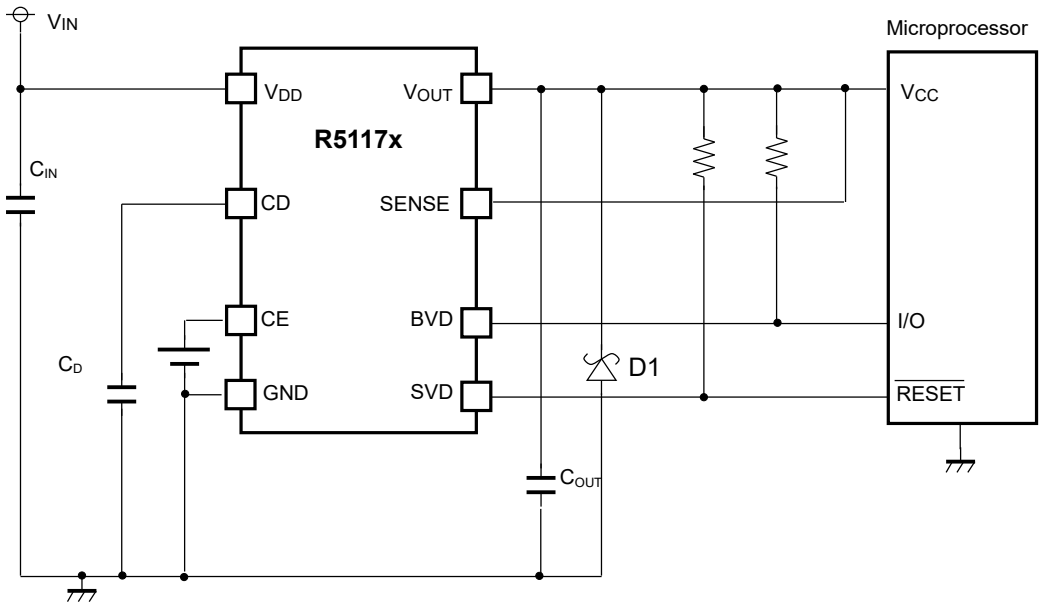

R5117xxx Typical Application for IC Chip Breakdown Prevention

When a sudden surge of electrical current travels along the VOUT pin and GND due to a short-circuit, electrical resonance of a circuit involving an output capacitor (C_{OUT}) and a short circuit inductor generates a negative voltage and may damage the device or the load devices. Connecting a schottky diode (D1) between the VOUT pin and GND has the effect of preventing damage to them.

TECHNICAL NOTES

The performance of a power source circuit using this device is highly dependent on a peripheral circuit. A peripheral component or the device mounted on PCB should not exceed a rated voltage, a rated current or a rated power. When designing a peripheral circuit, please be fully aware of the following points.

Phase Compensation

Phase compensation is provided to secure stable operation even when the load current is varied by utilizing capacity of the output ceramic capacitor and Equivalent Series Resistance (ESR). For this purpose, be sure to use a capacitor with 10 µF or more (C_{OUT}) and wire it to the pin as short as possible.

Evaluate the circuit with consideration of temperature and frequency characteristics, in case ESR value of the capacitor is large and the output is unstable. The capacitor with 1.0 µF or more (C_{IN}) connected in between VDD pin and GND pin must be wired the shortest.

TYPICAL CHARACTERISTICS

Note: Typical Characteristics are intended to be used as reference data; they are not guaranteed.

1) Supply Current vs. Temperature (V_{IN} = 14V)

V_{VRSET} = 3.3V, V_{SVSET} = 3.0V, V_{BVSET} = 3.5V

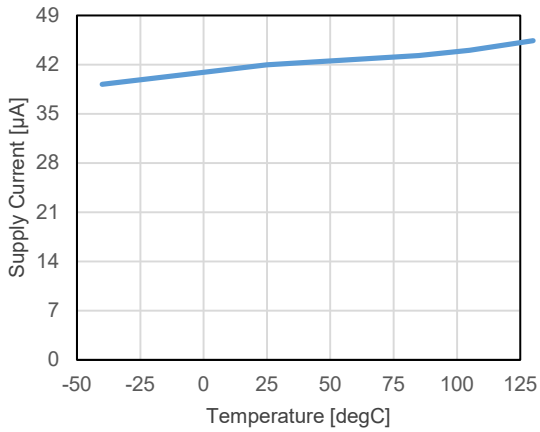

V_{VRSET} = 5.0V, V_{SVSET} = 4.6V, V_{BVSET} = 6.0V

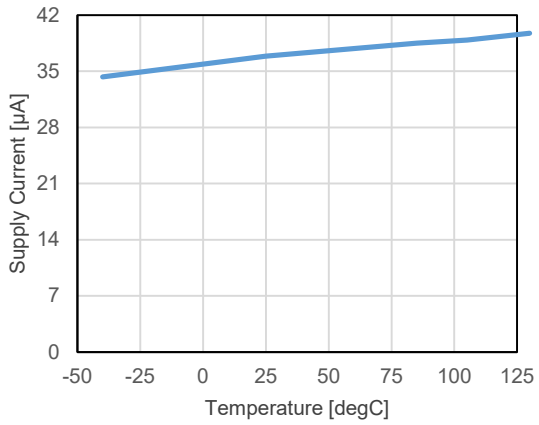

2) Supply Current vs. Input Voltage

V_{VRSET} = 3.3V, V_{SVSET} = 3.0V, V_{BVSET} = 3.5V

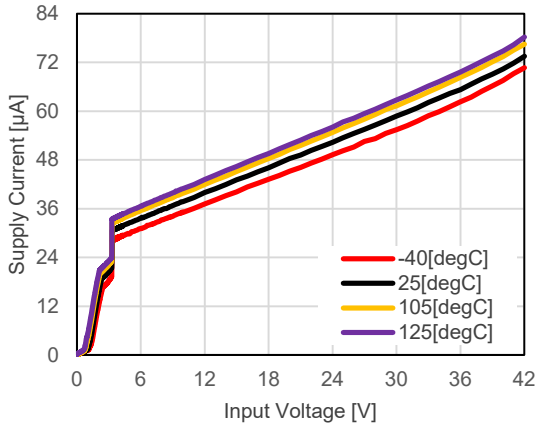

V_{VRSET} = 5.0V, V_{SVSET} = 4.6V, V_{BVSET} = 6.0V

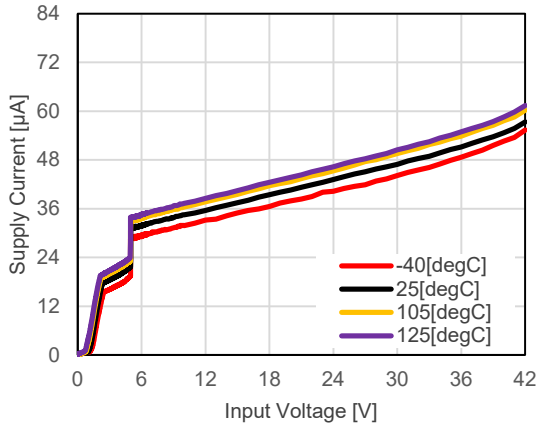

3) Supply Current vs. SENSE Voltage

V_{VRSET} = 3.3V, V_{SVSET} = 3.0V, V_{BVSET} = 3.5V

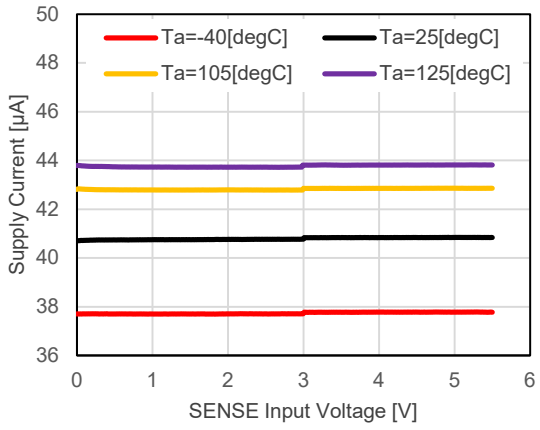

V_{VRSET} = 5.0V, V_{SVSET} = 4.6V, V_{BVSET} = 6.0V

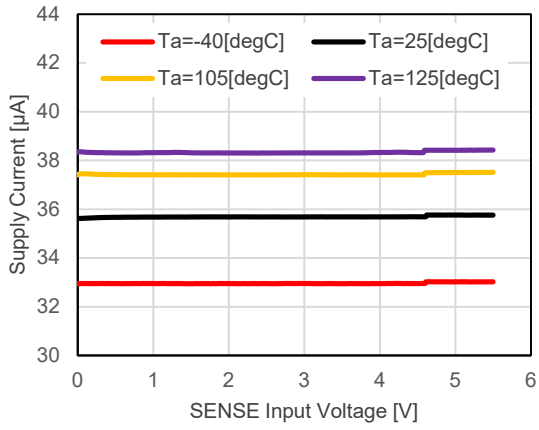

4) Output Voltage vs. Output Current (V_{IN} = V_{VRSET} + 3.0 V, Ta =25 °C)

V_{VRSET} = 3.3V

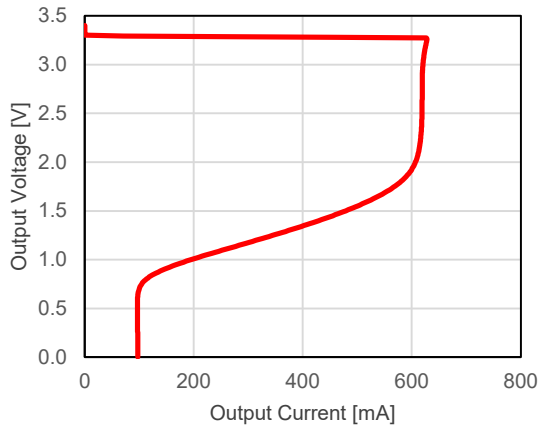

V_{VRSET} = 5.0V

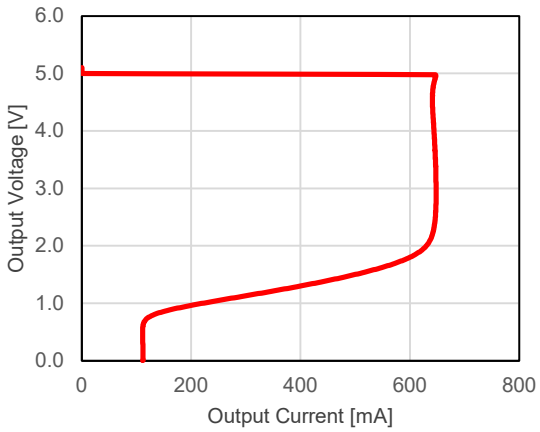

5) Output Voltage vs. Input Voltage (Ta =25 °C)

V_{VRSET} = 3.3V

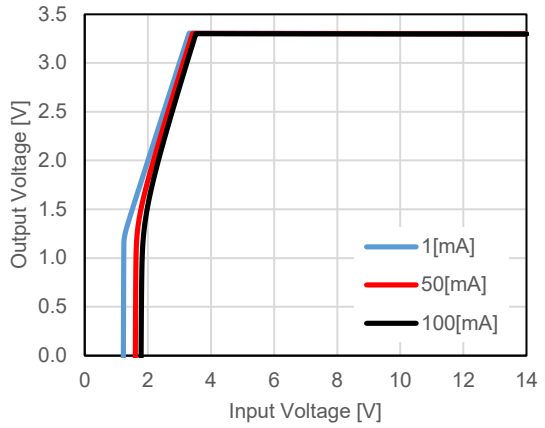

V_{VRSET} = 5.0V

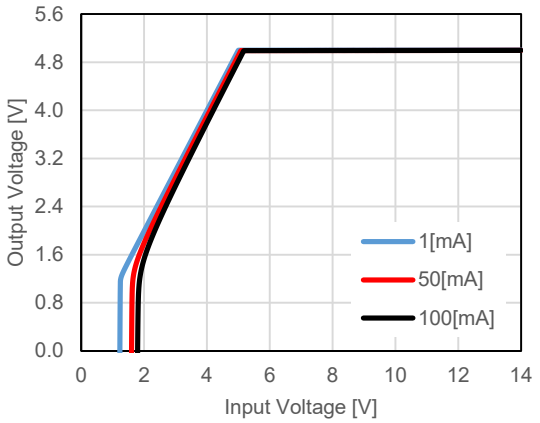

6) Output Voltage vs. Temperature (V_{IN} = 14V, I_{OUT} = 1 mA)

V_{VRSET} = 3.3V

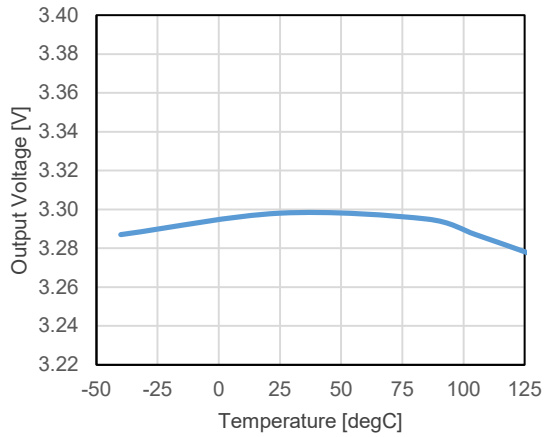

V_{VRSET} = 5.0V

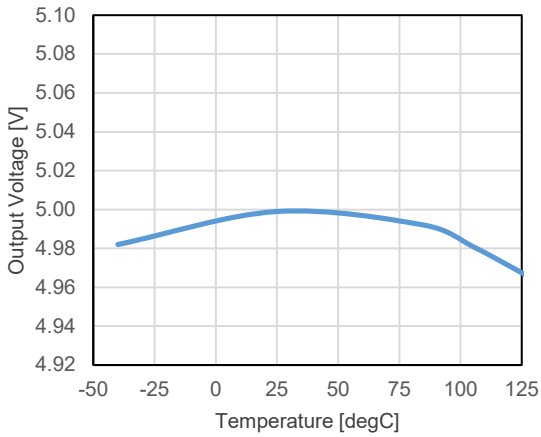

7) Output Voltage vs. Output Current

V_{VRSET} = 3.3V

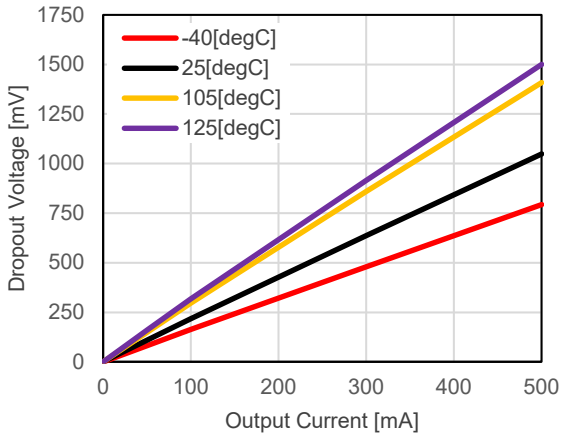

V_{VRSET} = 5.0V

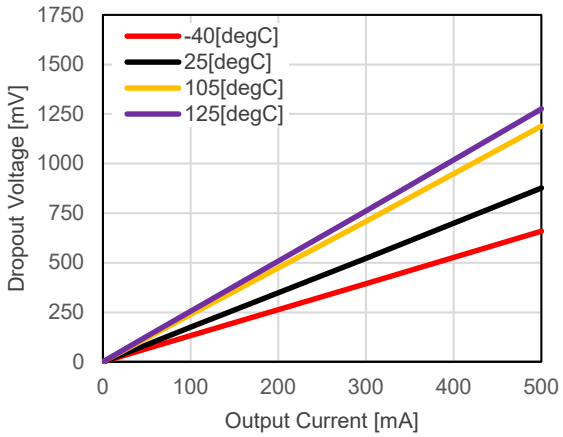

8) Ripple Rejection vs. Input Voltage (Ta=25 °C , Vripple = ± 0.2V)

V_{VRSET} = 3.3V

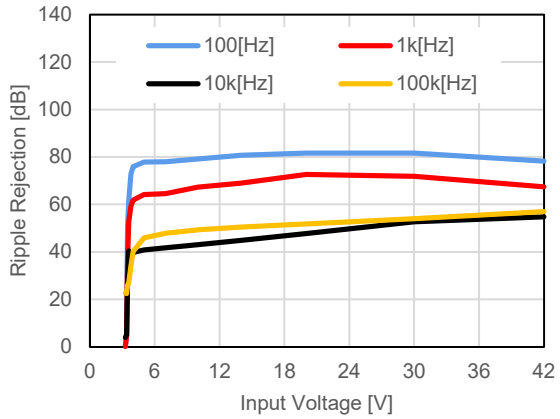

V_{VRSET} = 5.0V

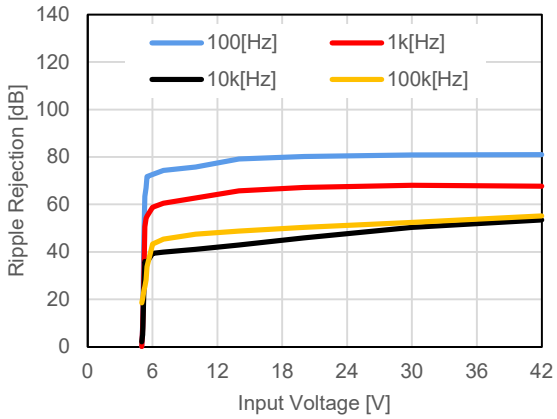

9) Ripple Rejection vs. Frequency (Ta=25 °C , V_{IN} = 14V ± 0.2Vripple)

V_{VRSET} = 3.3V

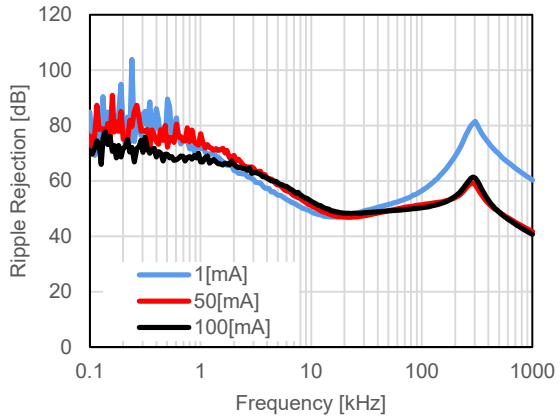

V_{VRSET} = 5.0V

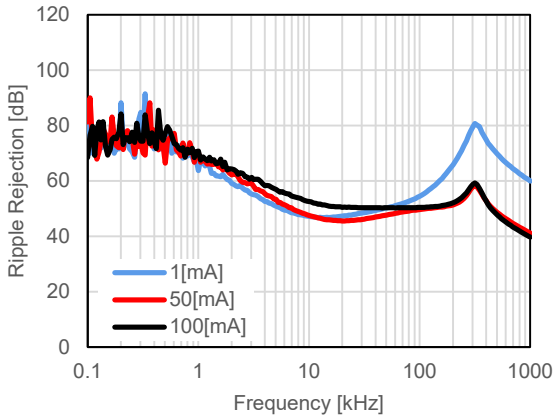

10) Input Transient Response (Ta=25 °C , V_{IN} = V_{VRSET} + 3.0 V ⇔ V_{VRSET} + 8.0 V, I_{OUT} = 1 mA)

V_{VRSET} = 3.3V

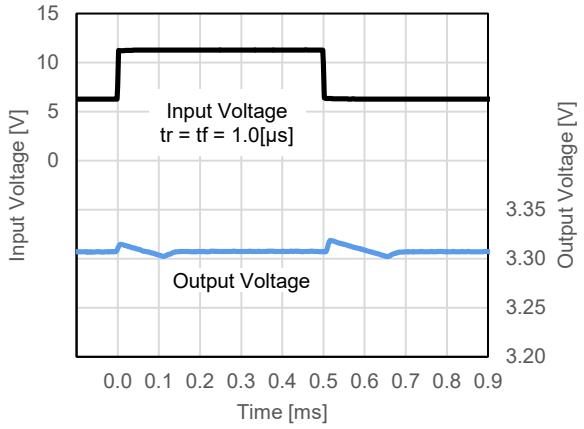

V_{VRSET} = 5.0V

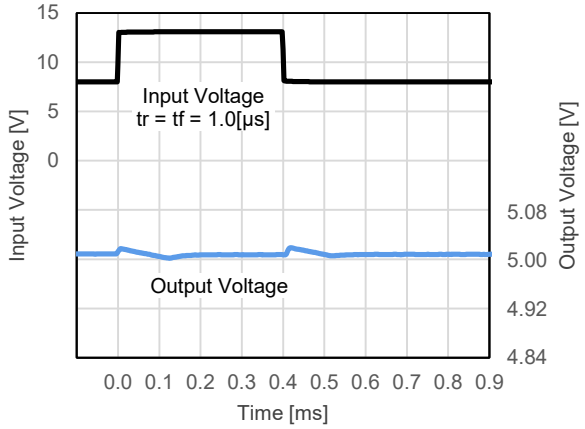

11) Load Transient Response (Ta=25 °C , I_{OUT} = 1⇔20mA , V_{IN} = 14V)

V_{VRSET} = 3.3V

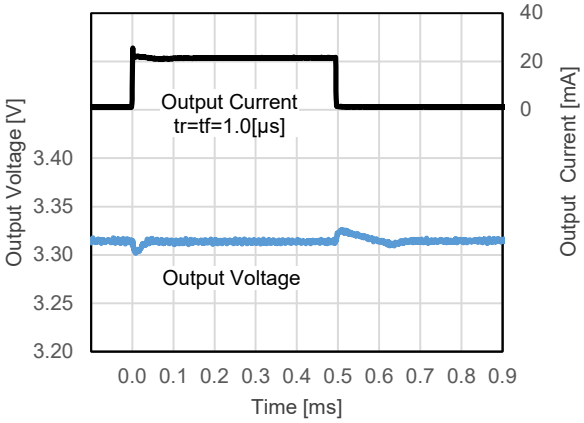

V_{VRSET} = 5.0V

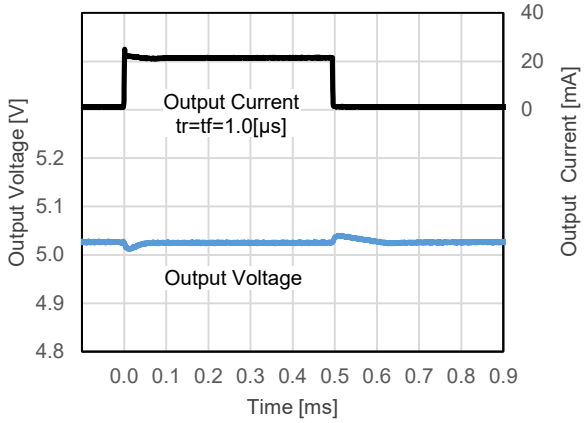

12) CE Transient Response (Ta=25 °C , V_{IN} = 14V, I_{OUT} = 1 mA)

V_{VRSET} = 3.3V

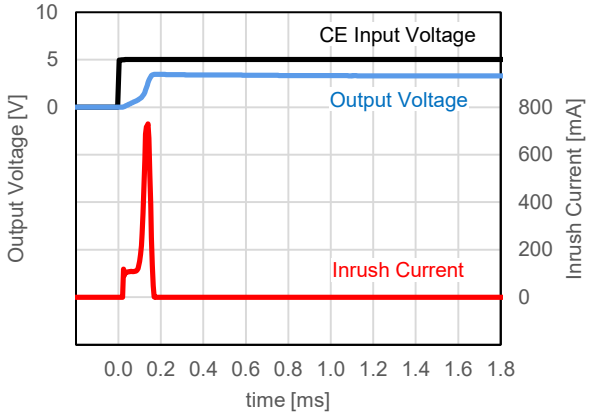

V_{VRSET} = 3.3V

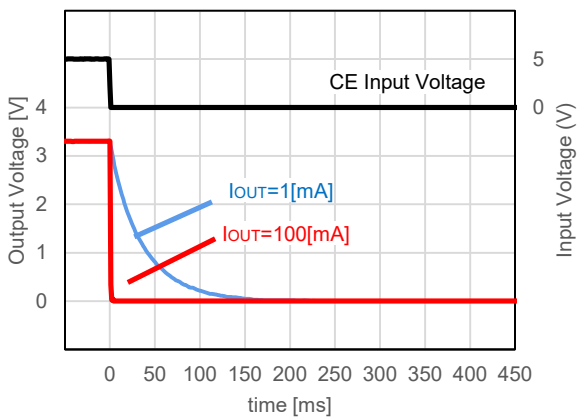

V_{VRSET} = 5.0V

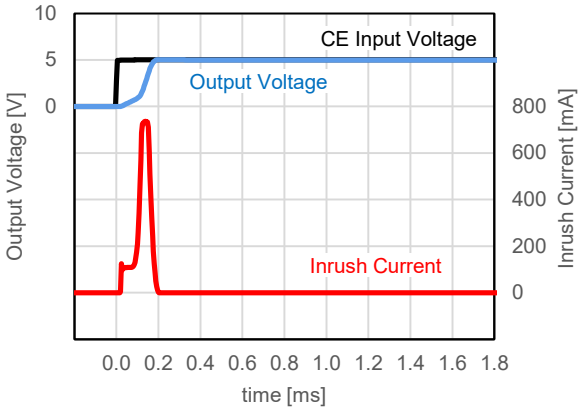

V_{VRSET} = 5.0V

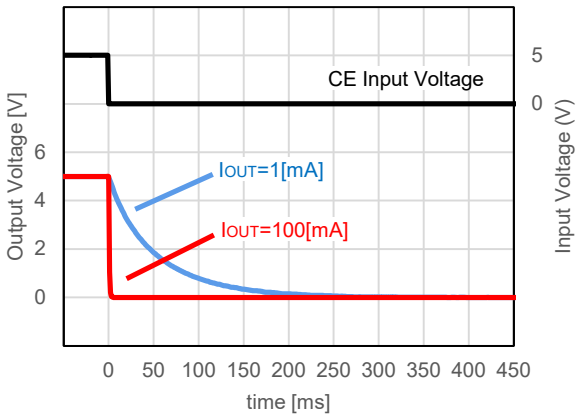

13) Load Dump (Ta=25 °C , I_{OUT} = 1 mA)

V_{VRSET} = 3.3V

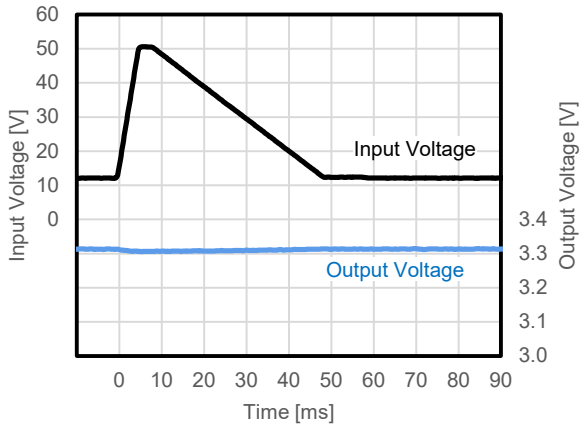

V_{VRSET} = 5.0V

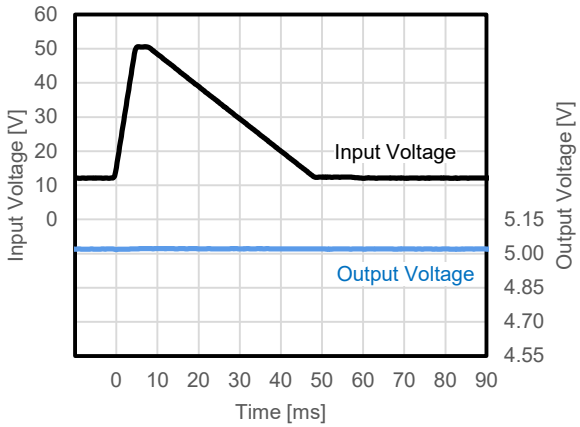

14) Cranking (Ta=25 °C , I_{OUT} = 1 mA)

V_{VRSET} = 3.3V

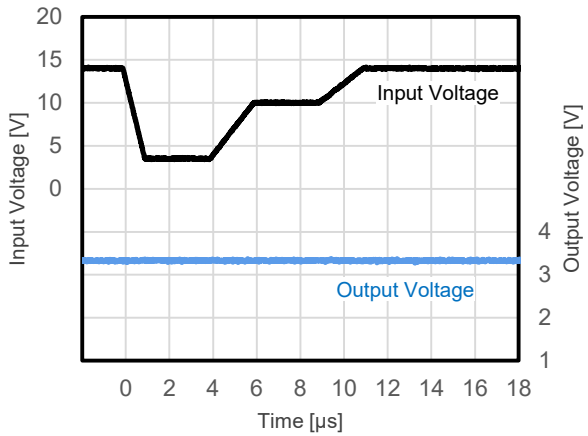

V_{VRSET} = 5.0V

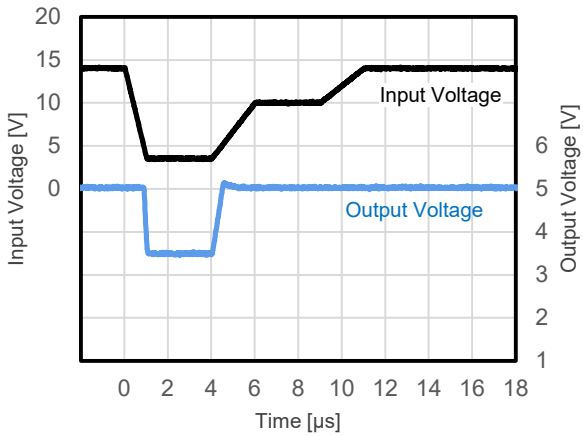

15) SVD/BVD Detection Voltage vs. Temperature

V_{SVSET} = 3.0V, V_{BVSET} = 3.5V

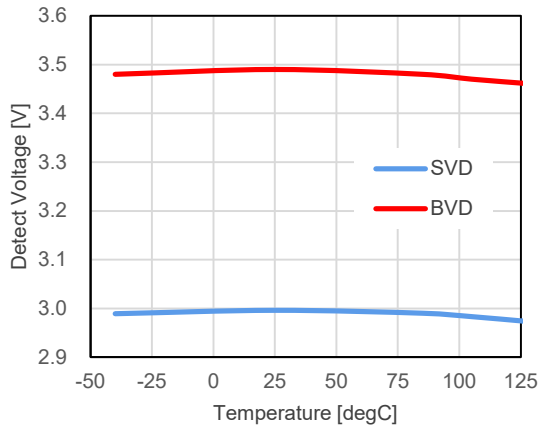

V_{SVSET} = 4.6V, V_{BVSET} = 6.0V

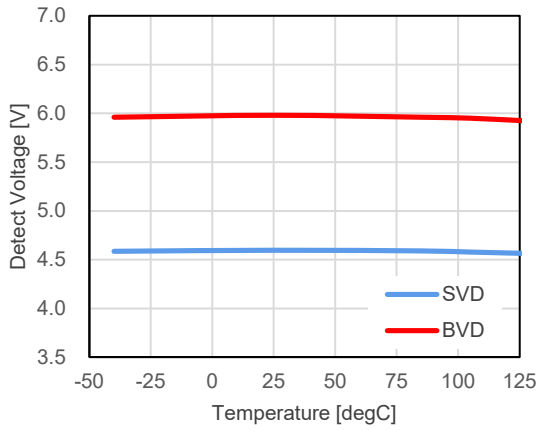

16) SVD/BVD Release Voltage vs. Temperature

V_{SVSET} = 3.0V, V_{BVSET} = 3.5V

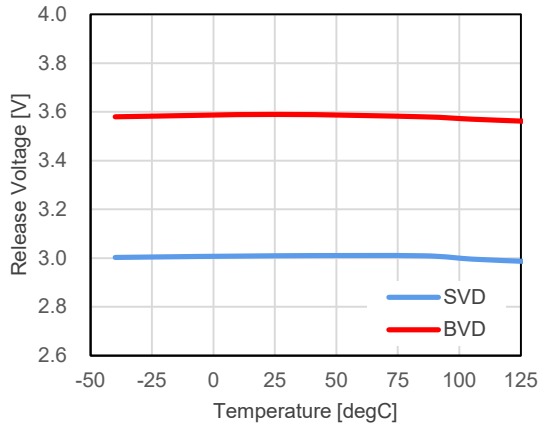

V_{SVSET} = 4.6V, V_{BVSET} = 6.0V

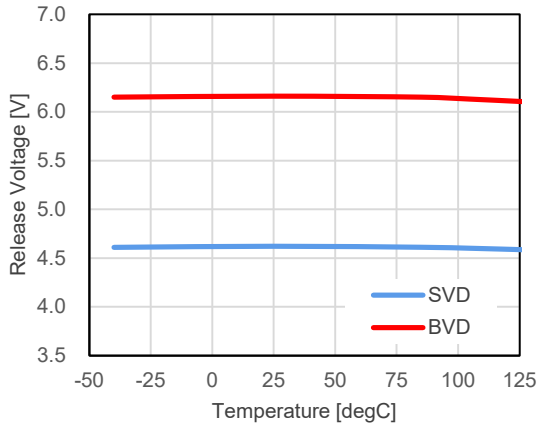

17) SVD Detection Voltage vs. Input Voltage

V_{SVSET} = 3.0V

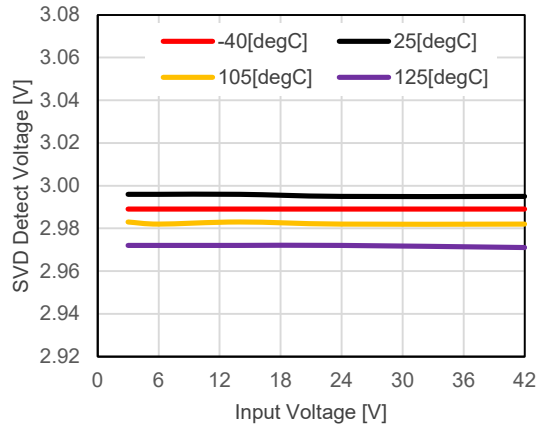

V_{SVSET} = 4.6V

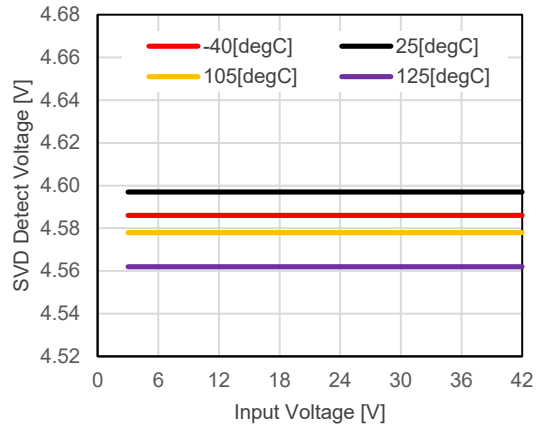

18) SVD Release Voltage vs. Input Voltage

V_{SVSET} = 3.0V

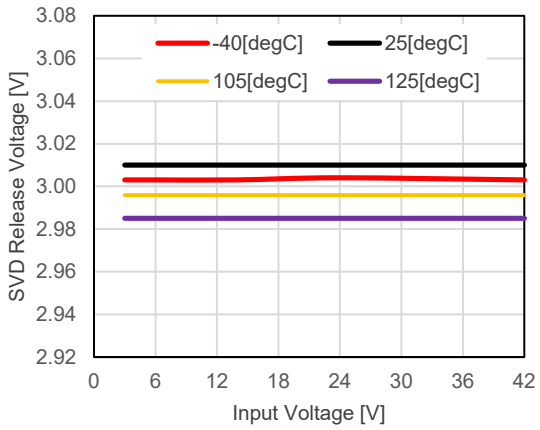

V_{SVSET} = 4.6V

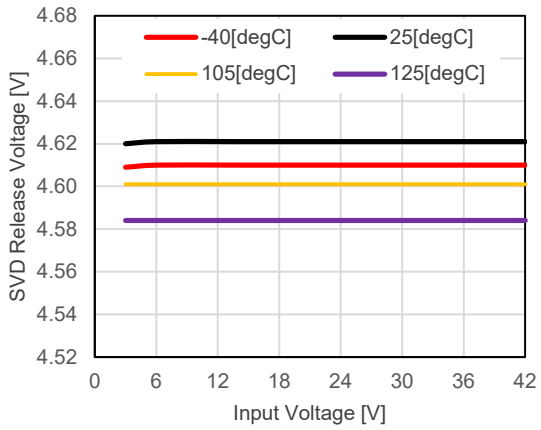

19) SVD/BVD Voltage vs. Input Voltage (Ta =25 °C)

V_{SVSET} = 3.0V, V_{BVSET} = 3.5V, Pull-up Voltage = 5.0V

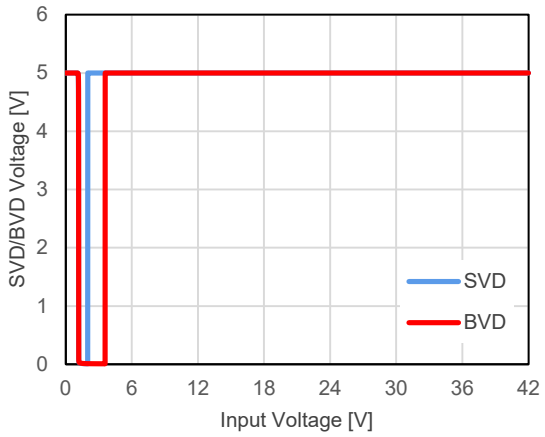

V_{SVSET} = 4.6V, V_{BVSET} = 6.0V, Pull-up Voltage = 5.0V

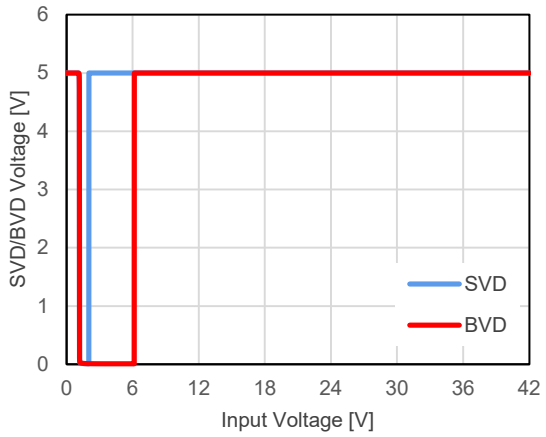

20) SVD Voltage vs. SENSE Voltage (Ta =25 °C)

V_{SVSET} = 3.0V, Pull-up Voltage = 5.0V

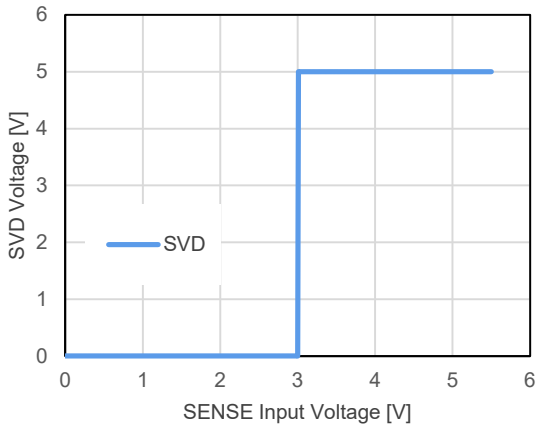

V_{SVSET} = 4.6V, Pull-up Voltage = 5.0V

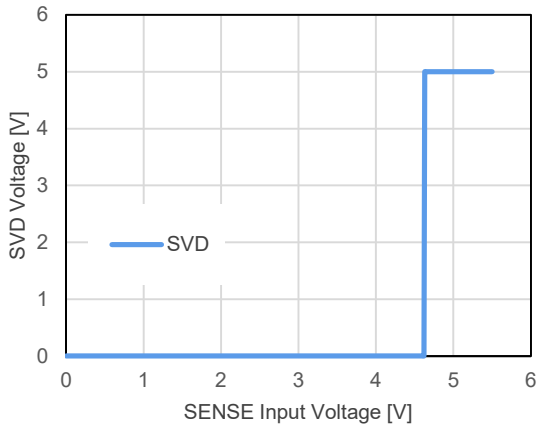

21) SVD/BVD Driver Output Current vs. Input Voltage

V_{SVSET} = 3.0V

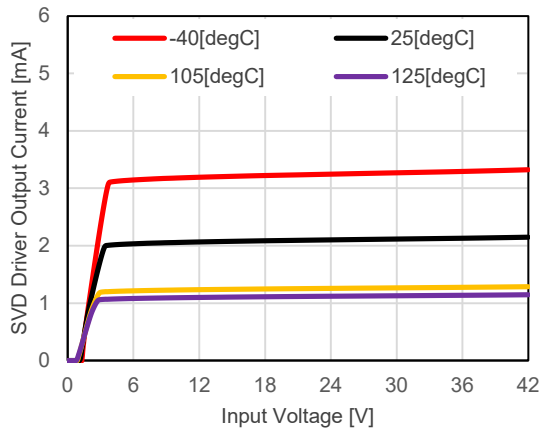

V_{BVSET} = 3.5V

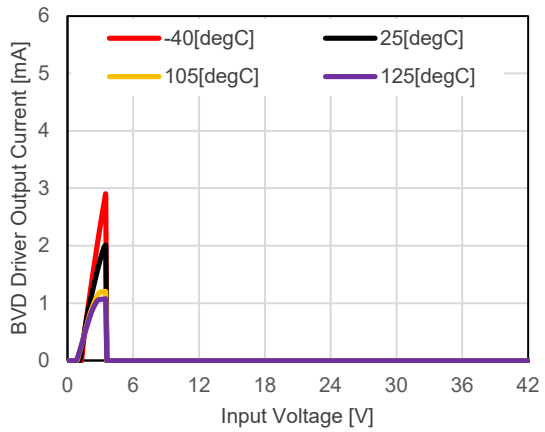

V_{SVSET} = 4.6V

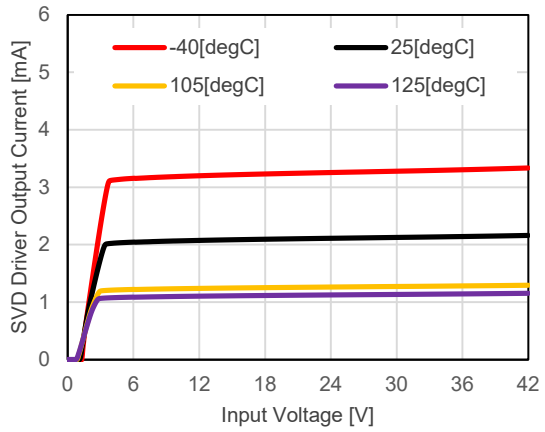

V_{BVSET} = 6.0V

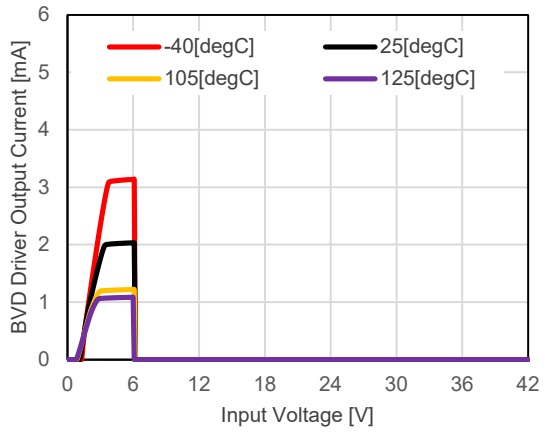

22) SVD/BVD Driver Output Current vs. V_{DS} (Ta =25 °C)

V_{SVSET} = 4.6V

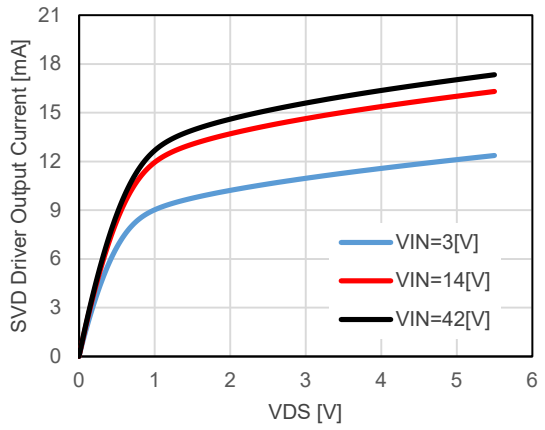

V_{BVSET} = 6.0V

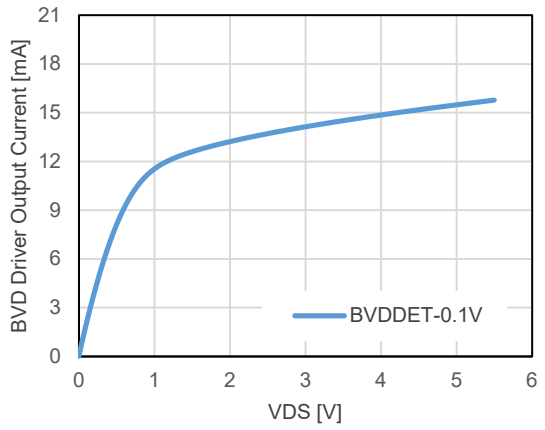

23) Release Delay Time vs. Temperature

V_{SVSET} = 4.6V, V_{BVSET} = 6.0V

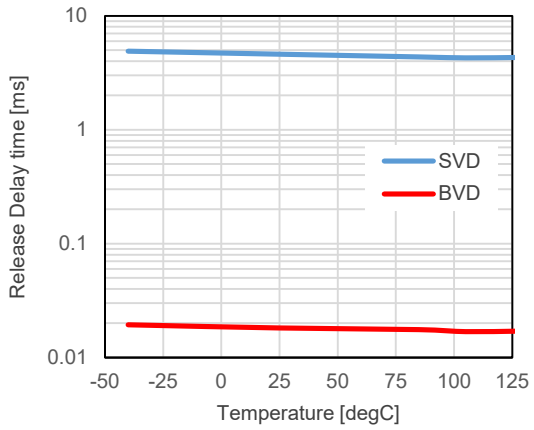

24) Detection Delay Time vs. Temperature

V_{SVSET} = 4.6V, V_{BVSET} = 6.0V

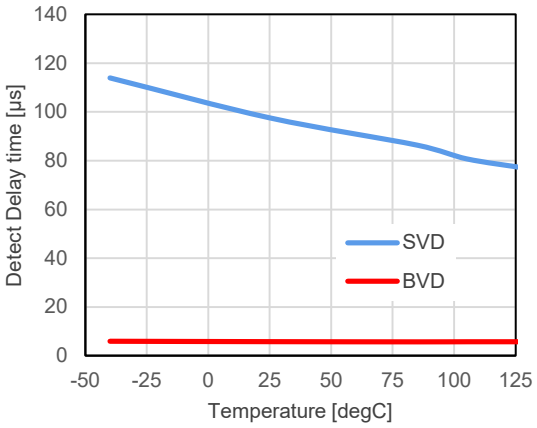

25) Release Delay Time vs. Input Voltage

V_{SVSET} = 4.6V

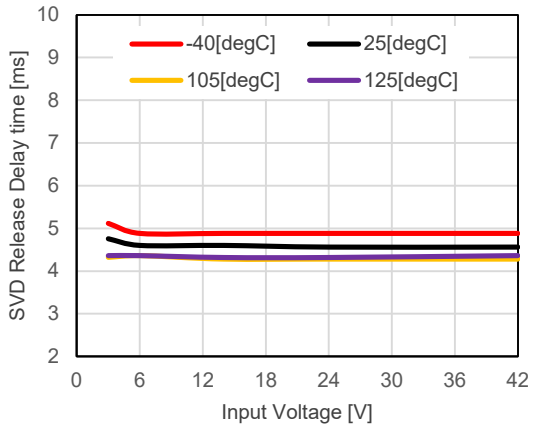

26) Detection/Release Delay Time vs. External Capacitance for CD Pin (Ta =25 °C)
V_{SVSET} = 4.6V, V_{BVSET} = 6.0V

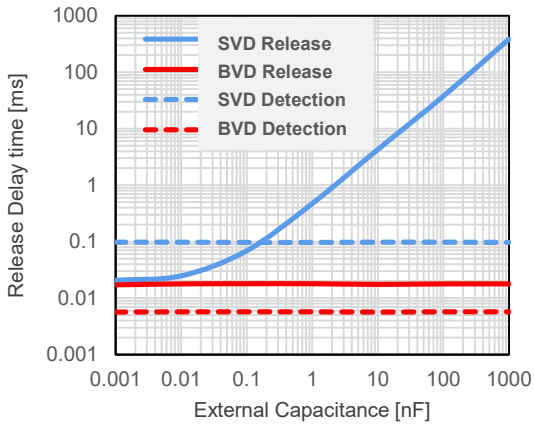

27) SENSE Pulse Width vs. SENSE Overdrive Voltage (Ta =25 °C)
Limit Pulse of Release State
V_{SVSET} = 4.6V

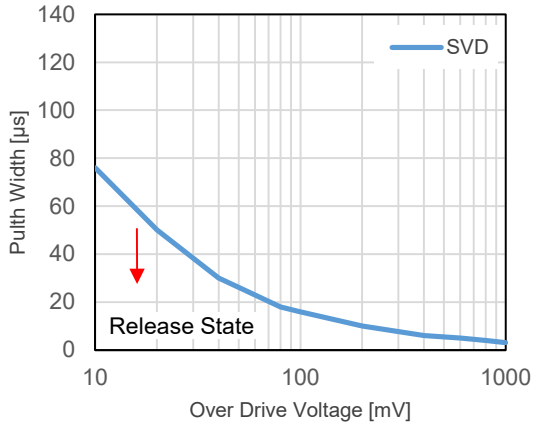

28) V_{IN} Pulse Width vs. V_{IN} Overdrive Voltage (Ta =25 °C)
Limit Pulse of Release State
V_{BVSET} = 6.0V

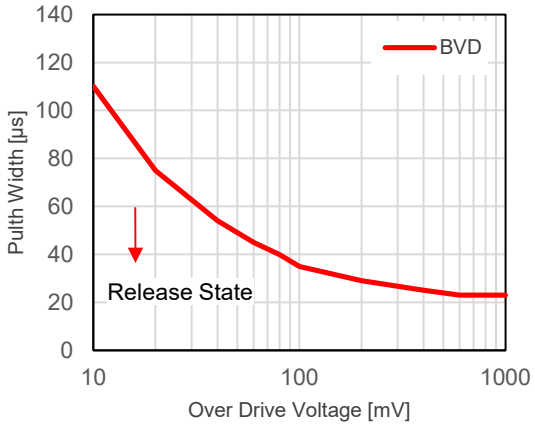

PD-HSOP-8E-(125150)-JE-B

The power dissipation of the package is dependent on PCB material, layout, and environmental conditions. The following measurement conditions are based on JEDEC STD. 51-7.

Measurement Conditions

Item	Measurement Conditions
Environment	Mounting on Board (Wind Velocity = 0 m/s)
Board Material	Glass Cloth Epoxy Plastic (Four-Layer Board)
Board Dimensions	76.2 mm × 114.3 mm × 0.8 mm
Copper Ratio	Outer Layer (First Layer): Less than 95% of 50 mm Square Inner Layers (Second and Third Layers): Approx. 100% of 50 mm Square Outer Layer (Fourth Layer): Approx. 100% of 50 mm Square
Through-holes	ϕ 0.3 mm × 21 pcs

Measurement Result (Ta = 25°C, Tjmax = 150°C)

Item	Measurement Result
Power Dissipation	3600 mW
Thermal Resistance (θja)	θja = 34.5°C/W
Thermal Characterization Parameter (ψjt)	ψjt = 10°C/W

θja: Junction-to-Ambient Thermal Resistance

ψjt: Junction-to-Top Thermal Characterization Parameter

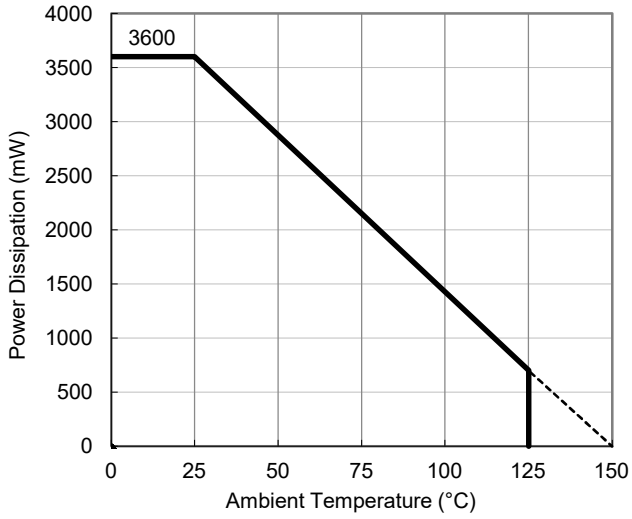

Power Dissipation vs. Ambient Temperature

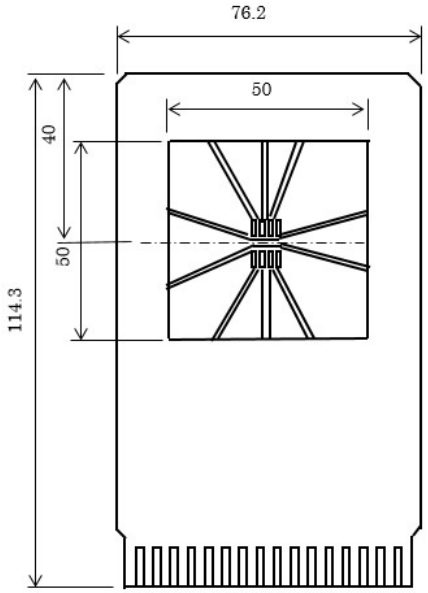

Measurement Board Pattern

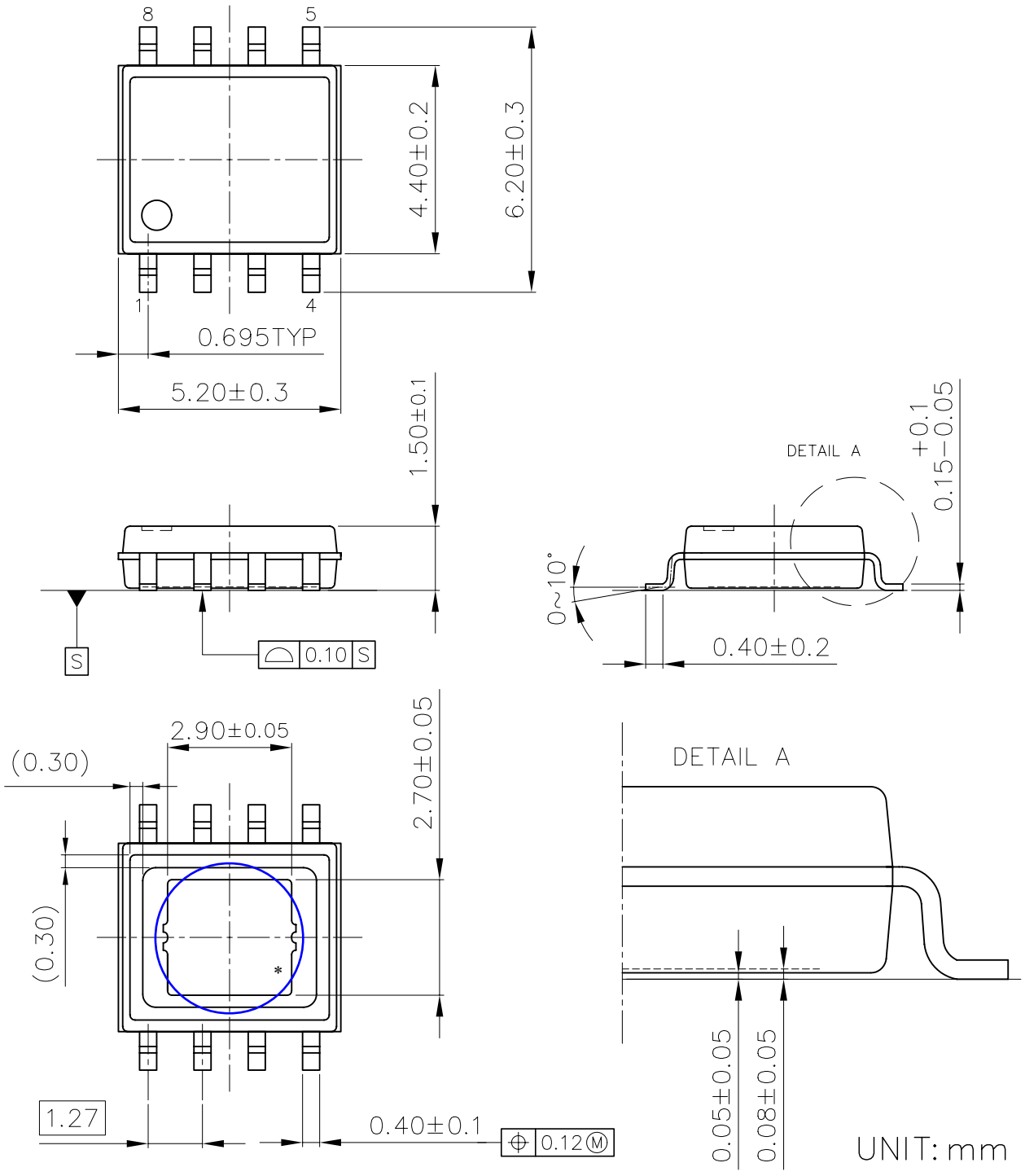

HSOP-8E Package Dimensions

∗ The tab on the bottom of the package shown by blue circle is substrate potential (GND). It is recommended that this tab be connected to the ground plane on the board but it is possible to leave the tab floating.

PD-HQFN0808-28-(125150)-JE-A

The power dissipation of the package is dependent on PCB material, layout, and environmental conditions. The following measurement conditions are based on JEDEC STD. 51-7.

Measurement Conditions

Item	Measurement Conditions
Environment	Mounting on Board (Wind Velocity = 0 m/s)
Board Material	Glass Cloth Epoxy Plastic (Four-Layer Board)
Board Dimensions	76.2 mm × 114.3 mm × 0.8 mm
Copper Ratio	Outer Layer (First Layer): Less than 95% of 50 mm Square Inner Layers (Second and Third Layers): Approx. 100% of 50 mm Square Outer Layer (Fourth Layer): Approx. 100% of 50 mm Square
Through-holes	ϕ 0.3 mm × 72 pcs

Measurement Result (Ta = 25°C, Tjmax = 150°C)

Item	Measurement Result
Power Dissipation	5800 mW
Thermal Resistance (θja)	θja = 21.5°C/W
Thermal Characterization Parameter (ψjt)	ψjt = 5°C/W

θja: Junction-to–ambient thermal resistance.

ψjt: Junction–to-top of package thermal characterization parameter

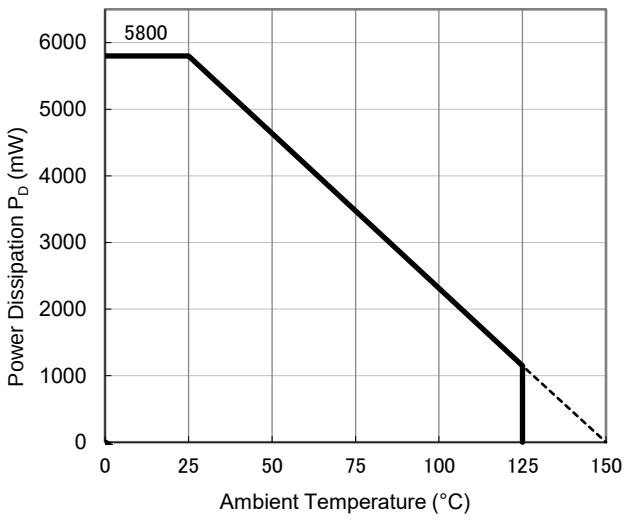

Power Dissipation vs. Ambient Temperature

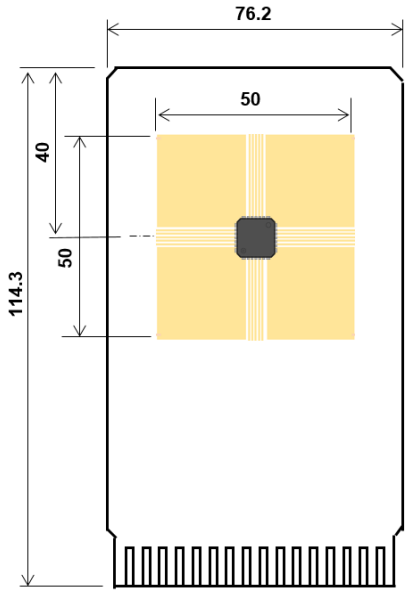

Measurement Board Pattern

DM-HQFN0808-28-JE-A

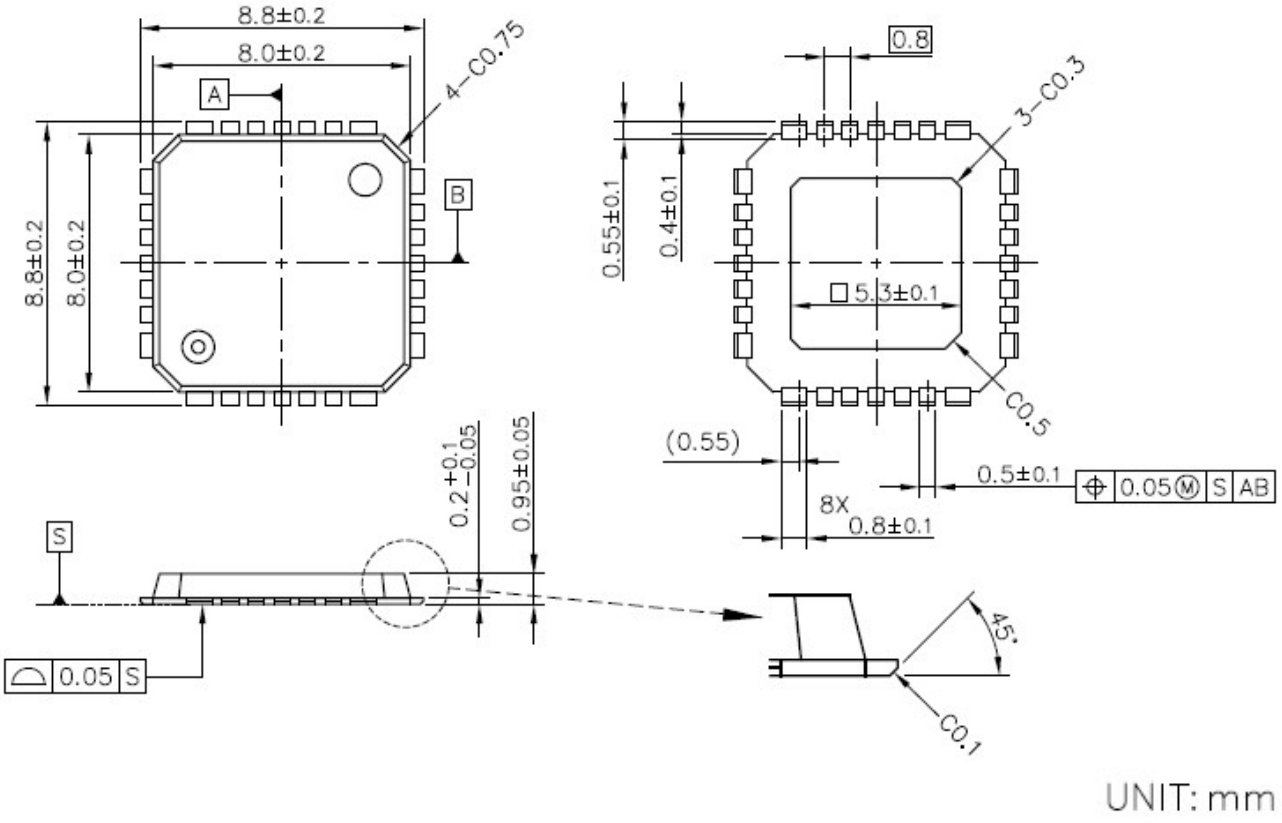

HQFN0808-28 Package Dimensions

1. The products and the product specifications described in this document are subject to change or discontinuation of production without notice for reasons such as improvement. Therefore, before deciding to use the products, please refer to our sales representatives for the latest information thereon.
2. The materials in this document may not be copied or otherwise reproduced in whole or in part without prior written consent of our company.
3. Please be sure to take any necessary formalities under relevant laws or regulations before exporting or otherwise taking out of your country the products or the technical information described herein.
4. The technical information described in this document shows typical characteristics of and example application circuits for the products. The release of such information is not to be construed as a warranty of or a grant of license under our company's or any third party's intellectual property rights or any other rights.
5. The products in this document are designed for automotive applications. However, when using the products for automotive applications, please make sure to contact our sales representative in advance due to confirming the quality level.
6. We are making our continuous effort to improve the quality and reliability of our products, but semiconductor products are likely to fail with certain probability. In order to prevent any injury to persons or damages to property resulting from such failure, customers should be careful enough to incorporate safety measures in their design, such as redundancy feature, fire containment feature and fail-safe feature. We do not assume any liability or responsibility for any loss or damage arising from misuse or inappropriate use of the products.
7. Anti-radiation design is not implemented in the products described in this document.
8. The X-ray exposure can influence functions and characteristics of the products. Confirm the product functions and characteristics in the evaluation stage.
9. WLCSP products should be used in light shielded environments. The light exposure can influence functions and characteristics of the products under operation or storage.
10. There can be variation in the marking when different AOI (Automated Optical Inspection) equipment is used. In the case of recognizing the marking characteristic with AOI, please contact our sales or our distributor before attempting to use AOI.
11. Please contact our sales representatives should you have any questions or comments concerning the products or the technical information.

NISSHINBO

Nisshinbo Micro Devices Inc.

Official website
https://www.nisshinbo-microdevices.co.jp/en/

Purchase information
https://www.nisshinbo-microdevices.co.jp/en/buy/