SF2316H-1

1588.655 MHz SAW Filter

- ***Designed for Front End GPS, and Glonass Applications***
- ***Steep Rejection***
- ***2.0 x 1.6 x 1.0 mm Surface-Mount Case***
- ***No Matching Circuit Required***
- ***ComplieswithDirective2002/95/EC(RoHS)***
- ***Moisture Sensitivity Level: 1***
- ***AEC-Q200 Qualified***

RoHS Compliant

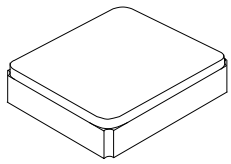

SM2016-4

Absolute Maximum Ratings

Rating	Value	Units
Maximum Input Power	+20	dBm
DC Voltage	3	VDC
Operating Temperature	-40 to +105	°C
Storage Temperature Range in Tape and Reel	-40 to +85	°C
Storage Temperature Range without Tape and Reel	-40 to +105	°C
Maximum Soldering Profile (5 cycles maximum)	260 °C for 10 s	

Electrical Characteristics

Characteristic 25°C	Sym	Notes	Min.	Typ	Max.	Units
Center Frequency	fC			1588.656		MHz
Insertion Loss, 1573.42 to 1577.42 MHz	IL			1.25	2.2	dB
Insertion Loss, 1571.42 to 1605.89 MHz				1.65	2.7	
Amplitude Ripple, 1573.42 to 1577.42 MHz				0.25	1.2	
Amplitude Ripple, 1571.42 to 1605.89 MHZ				0.46	1.5	
I/O VSWR 1571.42 to 1605.89 MHZ				1.85	2	
Attenuation Referenced to 0dB:						
0 to 915 MHz			30	36		dB
915 to 1452 MHz			28	36		
1452 to 1525 MHz			32	42		
1548.5 MHz			10	18		
1710 to 1850 MHz			28	40		
1850 to 6000 MHz			20	24		
Standard Reel Quantity — Reel Size - 7 inch	2000 pieces/reel					
Standard Reel Quantity — Reel Size - 13 inch	10000 pieces/reel					

Single-ended Input / Output Impedance Match	No matching network required for operation at 50 ohms
Package Size	SM2016-4
Lid Symbolization (Y=year, W=week)	5K, YW

CAUTION: Electrostatic Sensitive Device. Observe precautions for handling.

NOTES:

1. The design, manufacturing process, and specifications of this device are subject to change.
2. US or International patents may apply.
3. RoHS compliant from the first date of manufacture.

©2010-2016 by RFM Integrated Device, Inc.

Electrical Connections

Connection	Terminals
Input	1
Output	3
Ground	All others

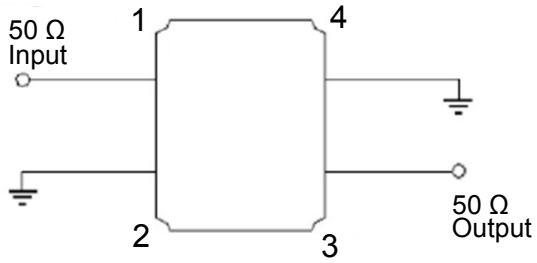

Frequency Characteristics

S21 Response: span 100 MHZ

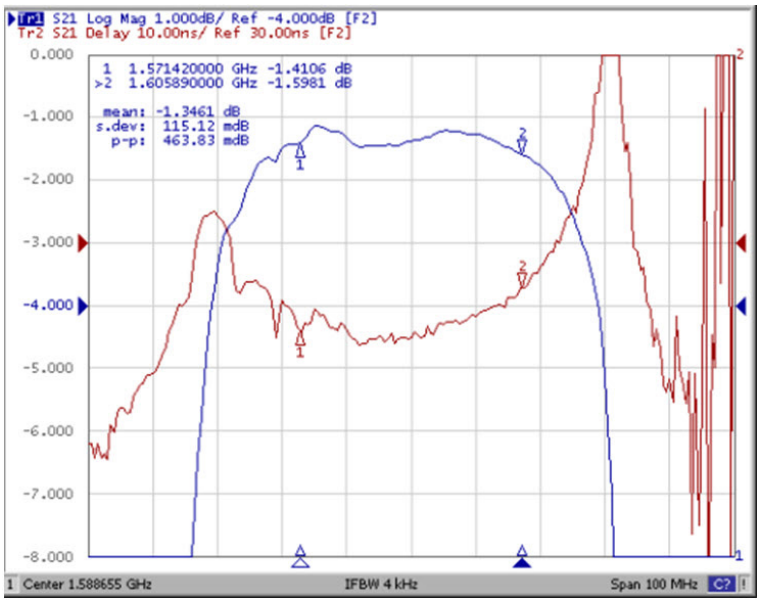

S21 Response: span 300 MHZ

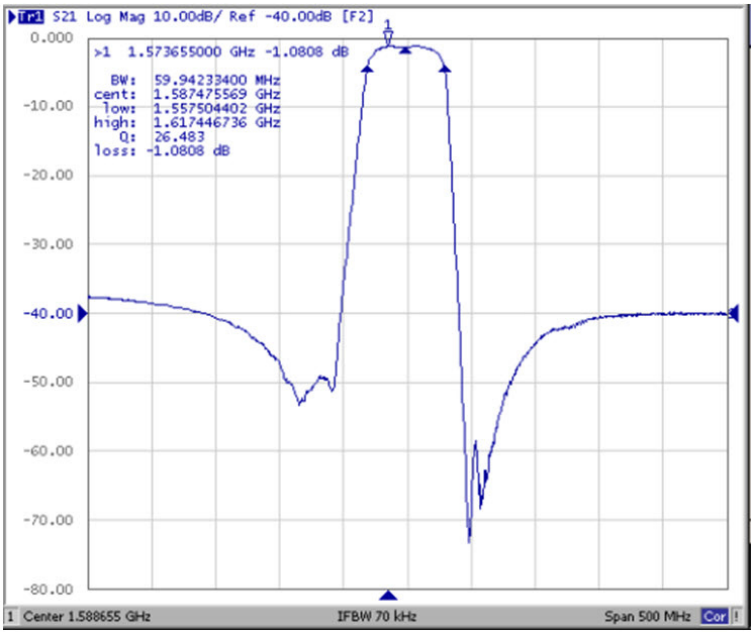

S21 Response: span 6 GHz

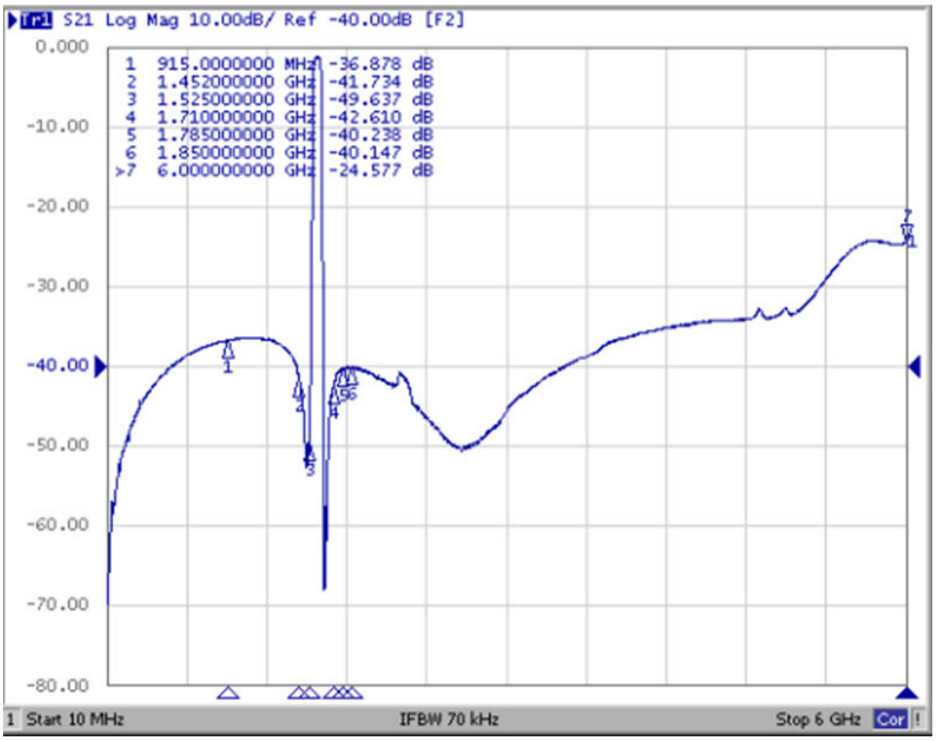

S11 & S22 VSWR - span 100 MHz

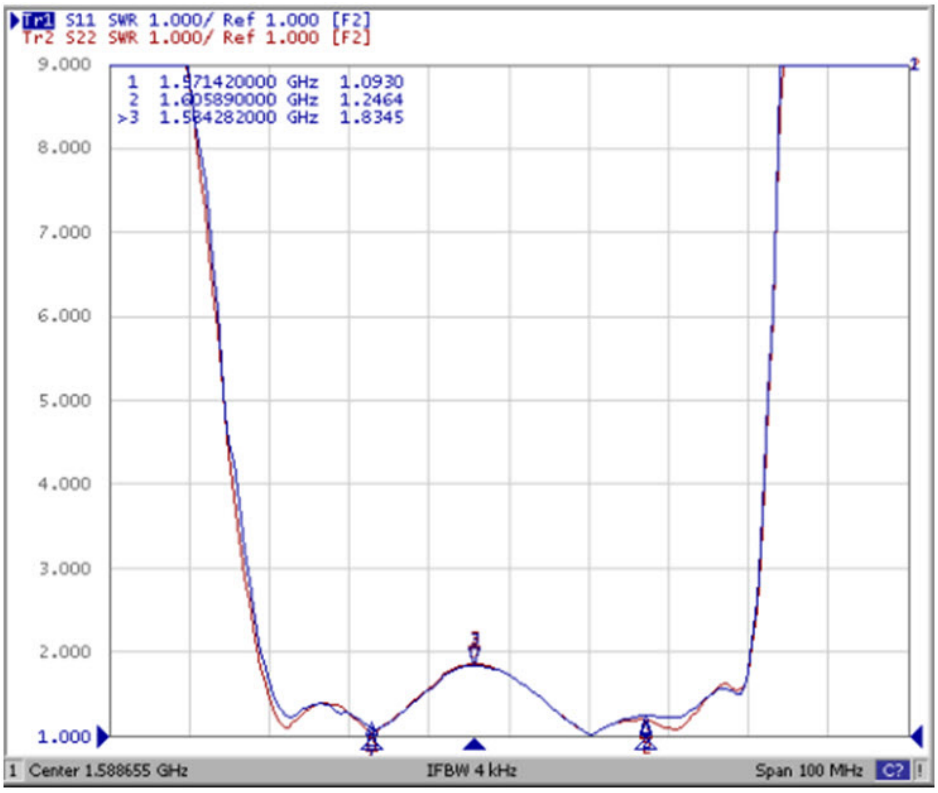

SM2016-4 Case

4-Terminal Ceramic Surface-Mount Case

2.0 X 1.6 mm Nominal Footprint

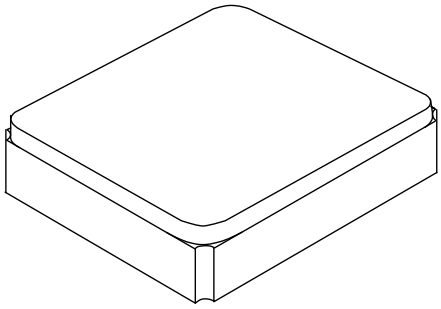

PCB PAD LAYOUT

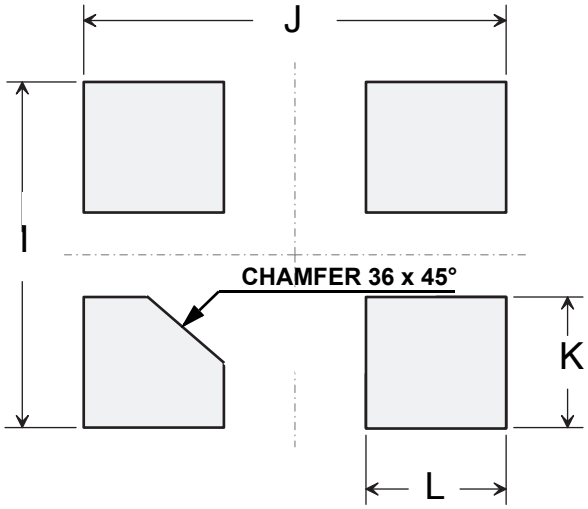

Dimensions in mm
All pads have the same dimensions

Case Dimensions

Dimension	mm		
	Min	Nom	Max
A	1.57	1.60	1.73
B	1.97	2.00	2.13
C	0.55	0.65	0.75
D		0.10	
E		0.10	
F		0.70	
G		0.50	
H		0.10	
I		1.80	
J		2.20	
K		0.60	
L		0.80	

Materials	
Solder Pad Plating	0.3 to 1.0 µm Gold over 1.27 to 8.89 µm Nickel
Lid Plating	2.0 to 3.0 µm Nickel
Body	Al_2O_3 Ceramic

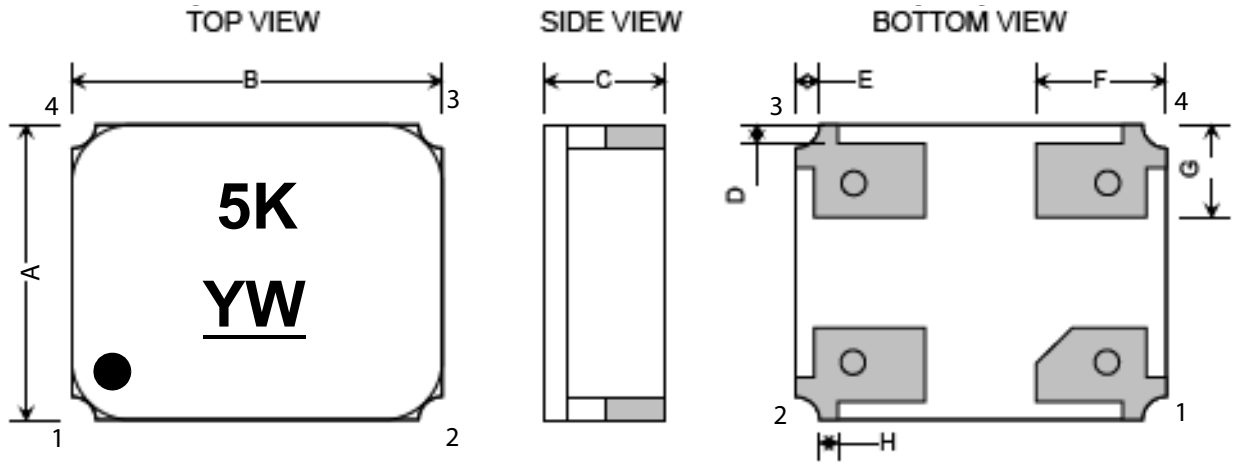

Recommended Reflow Profile
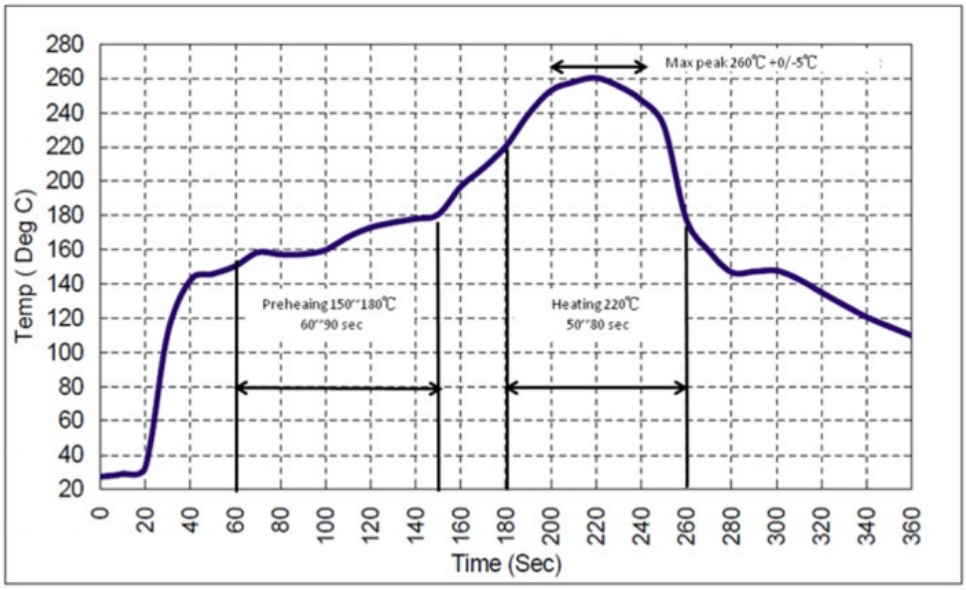
1. Preheating shall be fixed at 150~180ºC for 60~90 seconds.
2. Ascending time to preheating temperature 150ºC shall be 30 seconds min.
3. Heating shall be fixed at 220ºC for 50~80 seconds and at 260ºC +0/-5ºC peak (10 seconds).
4. Time: 5 times maximum.