PLETRONICS PRONTO™ QP44L SERIES 2.5V PECL Clock Oscillator

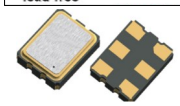

QP44L
2.5 x 3.2 x 0.9 mm
LCC Ceramic Package

Features

- Pletronics' QP44L Series is a Quartz crystal controlled Precision Square Wave Oscillator
- PECL Output
- Enable/Disable Function on pad 1
- Low Jitter
- 2.5V nominal Supply Voltage
- 10MHz-1500MHz nominal frequency

Applications

Driving A/Ds, D/As, FPGAs
Fibre Channel
Ethernet, GbE, SynchE
Medical
Storage Area Networking
COTS
Telecom
PON

Electrical Characteristics

Parameter	Min	Typ	Max	Unit	Condition
Frequency Range [2]	10	-	1500	MHz	
Frequency Stability vs. Temperature [2] ± 20 = **20**, ± 25 = **44**, ± 50 = **45**	-20	-	+50	ppm	For all supply voltages, load changes, aging for 1 year at 25°C ± 2°C, shock, vibration and temperatures
Operating Temperature Range [2]	-10 -20 -40	-	+70 +70 +85	°C	Standard range Extended range **C** option Extended range **E** option
Supply Voltage [1, 2] V_{CC}	2.125	2.50	2.625	Volts	
Supply Current I_{CC}	-	-	45	mA	
Output Waveform		PECL			
Output High Level V_{OH}	2.27	-	2.70	Volts	Referenced to Ground
Output Low Level V_{OL}	1.45	-	1.70	Volts	Referenced to Ground
Output T_{RISE} and T_{FALL}	-	-	1.0	ns	Vth is 10% and 90% of waveform
Startup Time	-	-	10	ms	Time for output to reach specified frequency
Duty Cycle	45	-	55	%	Referenced to 50% if amplitude or crossing point
$V_{DISABLE}$	-	-	0.3*Vcc	Volts	Referenced to Ground
V_{ENABLE}	0.7*Vcc	-	-		
Enable Time	-	-	100	ns	< 50MHz
	-	-	200	ns	> 50MHz
Disable Time	-	-	50	ns	Time for output to reach a high Z state
Standby Current	-	18	-	mA	Pad 1 low, device disabled
Phase Noise 10 Hz 100 Hz 1 kHz 1 MHz 20 MHz	-	-66 -96 -112 -136 -154	-	dBc/Hz	Precision Developed Frequencies: 100, 106.25, 120, 150, 156.25, 162.5, 175, 187.5, 200, 212.5, 312.5MHz 25°C ± 2°C at 2.5V / 156.250 MHz
Jitter	-	0.6	-	ps rms	12 kHz to 20 MHz from the output frequency @ 156.25Mhz
Phase Noise 10 Hz 100 Hz 1 kHz 1 MHz 20 MHz	-	-51 -88 -108 -135 -151	-	dBc/Hz	All Other Frequencies 25°C ± 2°C at 2.5V / 150.0 MHz
Jitter	-	2.4	-	ps rms	12 kHz to 20 MHz from the output frequency @150.0MHz
Aging	-	-	±1.0	ppm	per year
Storage Temperature Range	-55	-	+125	°C	

Notes: Specifications with Pad 1 E/D open circuit
[1] Place an appropriate power supply bypass capacitor next to device for correct operation
[2] Specified by part number

Product information is current as of publication date. The product conforms to specifications per the terms of the Pletronics standard warranty. May 21, 2020 Rev C
Production processing does not necessarily include testing of all parameters.
Copyright © 2020, Pletronics Inc. • 19013 36th Ave. W, Lynnwood, WA 98036 USA • www.pletronics.com • 425-776-1880

Part Number

Series Model	Frequency Stability		Operating Temperature Range	Supply Voltage V_{CC}	Frequency in MHz
QP44	45	L	E	W	- 125.0M
	45 = ± 50 ppm (STD) **44** = ± 25 ppm **20** = ± 20 ppm		**Blank** = -10 to +70°C (STD) **C** = -20 to +70°C **E** = -40 to +85°C	**W** = 2.5V ±5%	10-1500MHz

Device Marking

PRONTO
- ***YMDxxx***

PRONTO = Pletronics Model
YMD = Date Code, Year Month Day(see below)
xxx = internal factory codes

Note: Specifications such as frequency stability, supply voltage and operating temperature range, etc. are not identified from marking. External packaging labels and packing list will correctly identify the ordered Pletronics part number.

Codes for Date Code YMD (Year Month Day)

Code	9	0	1	2	3	Code	A	B	C	D	E	F	G	H	J	K	L	M
Year	2019	2020	2021	2022	2023	Month	JAN	FEB	MAR	APR	MAY	JUN	JUL	AUG	SEP	OCT	NOV	DEC

Code	1	2	3	4	5	6	7	8	9	A	B	C	D	E	F	G
Day	1	2	3	4	5	6	7	8	9	10	11	12	13	14	15	16
Code	H	J	K	L	M	N	P	R	T	U	V	W	X	Y	Z	
Day	17	18	19	20	21	22	23	24	25	26	27	28	29	30	31	

Package Labeling

Tape and Reel available for quantities of 250 to 1000 per reel, cut tape for < 250. 16mm tape, 8mm pitch.

P/N Label is 1" x 2.6" (25.4mm x 66.7mm)
Font is Courier New
Bar code is 39-Full ASCII

RoHs Label is 1" x 2.6" (25.4mm x 66.7mm)
Font is Arial

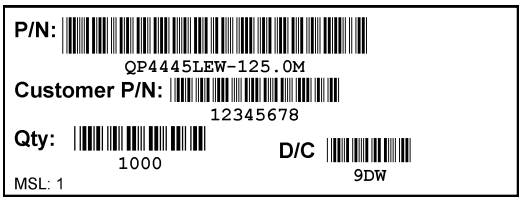

RoHS Compliant
2nd LvL Interconnect
Category=e4
Max Safe Temp=260C for 10s 2X Max

Pletronics Inc. certifies this device is in accordance with the RoHS 3 and WEEE 2 directives.

Pletronics Inc. guarantees the device does not contain the following: Cadmium, Hexavalent Chromium, Lead, Mercury, PBB's, PBDE's
Weight of the Device: 0.041 grams
Moisture Sensitivity Level: 1 As defined in J-STD-020D
Second Level Interconnect code: e4

Copyright © 2020, Pletronics Inc. • 19013 36th Ave. W, Lynnwood, WA 98036 USA • www.pletronics.com • 425-776-1880

Mechanical Dimensions (mm)

[TOP VIEW]

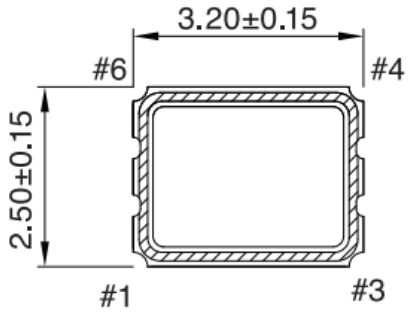

[BOTTOM VIEW]

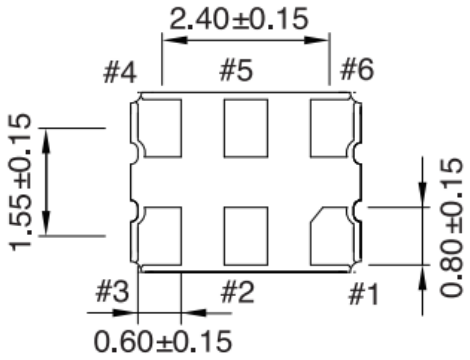

[SIDE VIEW]

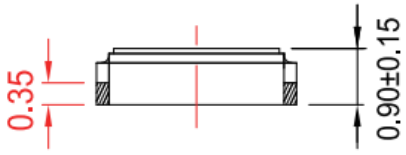

Pin#	Function
1	Tri-State
2	NC
3	GND
4	Output
5	Comp. Output
6	Supply Voltage

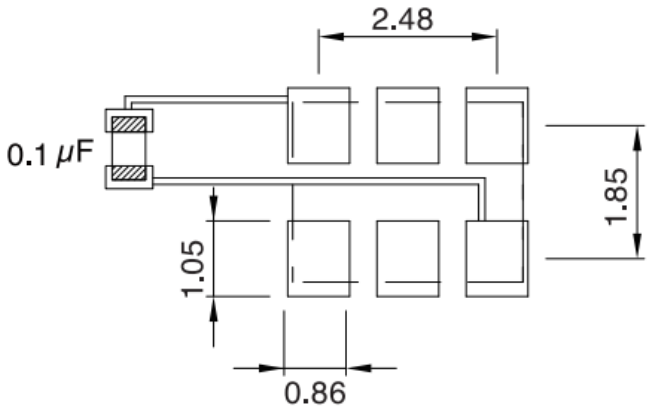

To ensure optimal oscillator performance, place a by-pass capacitor of 0.1µF as close to the part as possible between Vdd and GND pads.

For Optimum Jitter Performance, Pletronics recommends:

- A ground plane under the device
- Do not route large transient signals (both current and voltage) under the device
- Do not place near a large magnetic field such as a high frequency switching power supply
- Do not place near piezoelectric buzzers or mechanical fans

Copyright © 2020, Pletronics Inc. • 19013 36th Ave. W, Lynnwood, WA 98036 USA • www.pletronics.com • 425-776-1880

Electrical Test /Load Circuit

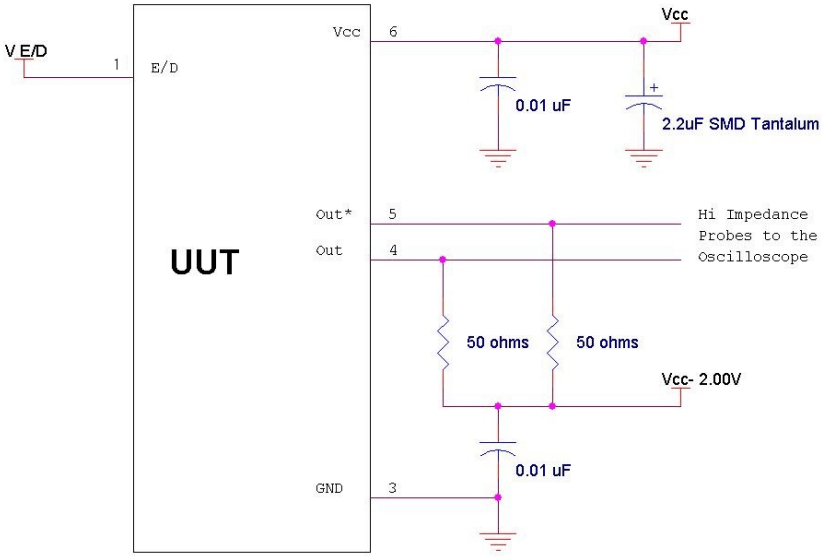

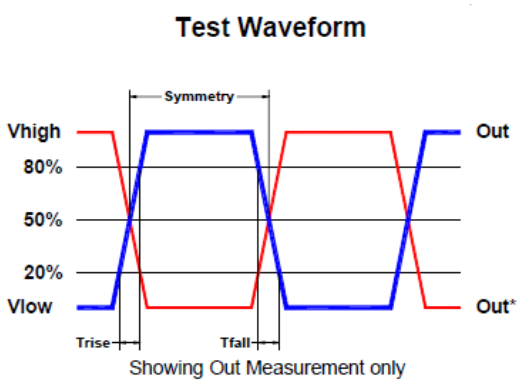

Environmental / ESD Ratings

Reliability: Environmental Compliance

Parameter	Reference Standard	Test Condition
Vibration	MIL-STD-883 2007 Condition A JESD22-B103 Condition 1	10-2000Hz, 1.52mm, 20g, each axis for 4hrs
Thermal Shock	MIL-STD-883 1010 Condition B JESD22-A104 Condition B	-55°C, 125°C, soak time is 10 mins, with total 200 cycles
Mechanical Shock	MIL-STD-883 2002 Condition B JESD22-B104 Condition B	1500g, half-sine, 0.5ms, each axis for 3 times

Thermal Characteristics:
The maximum die or junction temperature is 155°C
The thermal resistance junction to board is 45 to 65°C/Watt depending on the solder pads, ground plane and construction of the PCB.

ESD Ratings

Model	Min. Voltage	Condition
Human Body Model	2000V	JESD22-A114
Machine Model	120V	JESD22-A115

Absolute Maximum Ratings

Parameter	Unit
V_{CC} Supply Voltage	-0.5V to +5.0V
Vi Input Voltage	-0.5V to V_{CC} + 0.5V
Vo Output Voltage	-0.5V to V_{CC} + 0.5V

Copyright © 2020, Pletronics Inc. • 19013 36th Ave. W, Lynnwood, WA 98036 USA • www.pletronics.com • 425-776-1880

Reflow Cycle

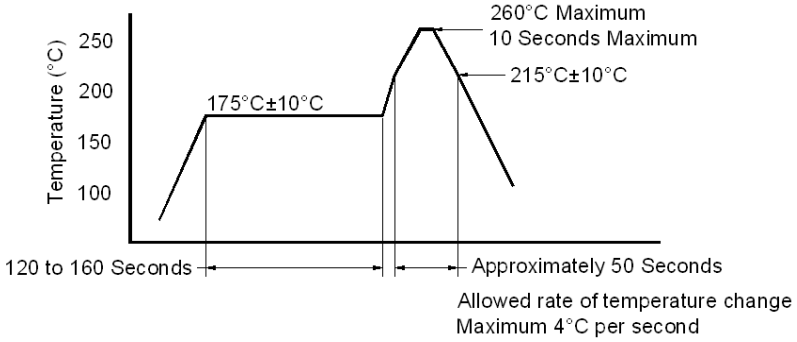

The part may be reflowed 2 times without degradation (typical for lead free processing).

Tape and Reel

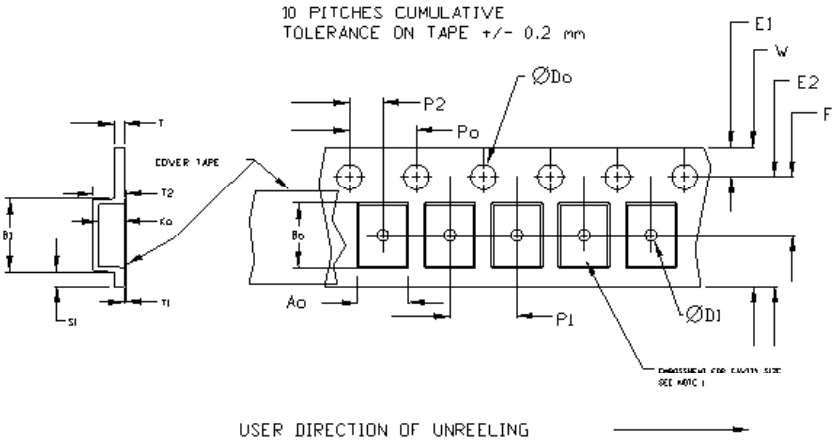

Tape Constant Dimensions Table 1								
Tape Size	Do	D1 min	E1	Po	P2	S1 min	T max	T1 max
8mm	1.5 +0.1 -0.0	1.0	1.75 ±0.1	4.0 ±0.1	2.0 ±0.05	0.6	0.6	0.1
12mm		1.5						
16mm		1.5			2.0 ±0.1			
24mm		1.5						

Tape Variable Dimensions Table 2							
Tape Size	B1 max	E2 min	F	P1	T2 max	W max	Ao, Bo & Ko
8mm	4.55	6.25	3.5 ±0.05	4.0 ±0.1	1.55	8.3	Note 1

Dimensions in mm Drawing Not to scale

Note 1: Embossed cavity to conform to EIA– 481-B

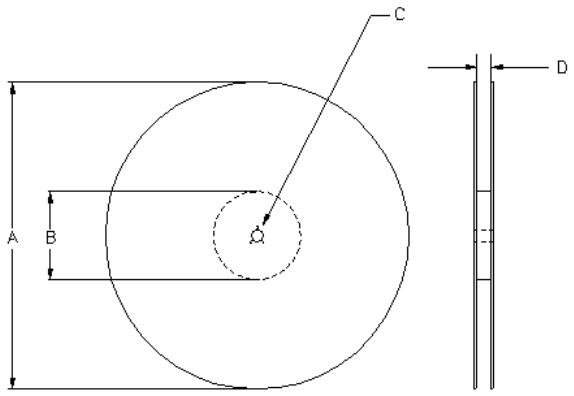

Reel Dimensions (may vary) Table 3						
	A		B		C	D
Reel Size	Inches	mm	Inches	mm	mm	mm
7	7.0	177.8	2.50	63.5	13.0 +0.5 -0.2	Tape size +0.4 +2.0 -0.0
10	10.0	254.0	4.00	101.6		
13	13.0	330.2	3.75	95.3		

Copyright © 2020, Pletronics Inc. • 19013 36th Ave. W, Lynnwood, WA 98036 USA • www.pletronics.com • 425-776-1880

Important Notice

Pletronics Incorporated (PLE) reserves the right to make corrections, improvements, modifications and other changes to this product at anytime. PLE reserves the right to discontinue any product or service without notice. Customers are responsible for obtaining the latest relevant information before placing orders and should verify that such information is current and complete. All products are sold subject to PLE's terms and conditions of sale supplied at the time of order acknowledgment.

PLE warrants performance of this product to the specifications applicable at the time of sale in accordance with PLE's limited warranty. Testing and other quality control techniques are used to the extent PLE deems necessary to support this warranty. Except where mandated by specific contractual documents, testing of all parameters of each product is not necessarily performed.

PLE assumes no liability for application assistance or customer product design. Customers are responsible for their products and applications using PLE components. To minimize the risks associated with the customer products and applications, customers should provide adequate design and operating safeguards.

PLE products are not designed, intended, authorized or warranted to be suitable for use in life support applications, weapons, weapons systems or space applications, devices or systems or other critical applications that may involve potential risks of death, personal injury or severe property or environmental damage. Inclusion of PLE products in such applications is understood to be fully at the risk of the customer. Use of PLE products in such applications requires the written approval of an appropriate PLE officer. Questions concerning potential risk applications should be directed to PLE.

PLE does not warrant or represent that any license, either express or implied, is granted under any PLE patent right, copyright, artwork or other intellectual property right relating to any combination, machine or process which PLE product or services are used. Information published by PLE regarding third-party products or services does not constitute a license from PLE to use such products or services or a warranty or endorsement thereof. Use of such information may require a license from a third party under the patents or other intellectual property of the third party, or a license from PLE under the patents or other intellectual property of PLE.

Reproduction of information in PLE data sheets or web site is permissible only if the reproduction is without alteration and is accompanied by associated warranties, conditions, limitations and notices. Reproduction of this information with alteration is an unfair and deceptive business practice. PLE is not responsible or liable for such altered documents.

Resale of PLE products or services with statements different from or beyond the parameters stated by PLE for that product or service voids all express and implied warranties for the associated PLE product or service and is an unfair or deceptive business practice. PLE is not responsible for any such statements.

Contacting Pletronics Inc.

Pletronics, Inc.
19013 36th Ave. West
Lynnwood, WA 98036-5761
U.S.A.

Tel: 425.776.1880
Fax: 425.776.2760
email: ple-sales@pletronics.com

URL: www.pletronics.com

Copyright © 2020, Pletronics Inc. • 19013 36th Ave. W, Lynnwood, WA 98036 USA • www.pletronics.com • 425-776-1880