Han® 3 A RJ45-panel feed-throughs and couplings Cat. 5

Identification		Part number	Drawing / Dimensions in mm
Panel feed-through set, 8-poles			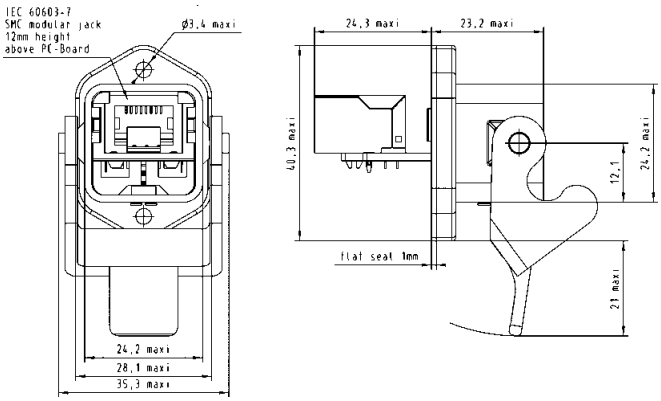
Plastic version, black	straight	09 45 225 1100	
	angled	09 45 225 1108	
Metal version Standard, grey	straight	09 45 215 1100	
	straight, inner vertical jack	09 45 215 1101	
	angled	09 45 215 1108	
Metal version Standard, grey with self-closing protective cap	straight	09 45 215 1103	
Metal version M, black	straight	09 45 215 1102	
	angled	09 45 215 1109	
Coding pin set for 4 different codings		09 45 820 0000	Dimensions valid for plastic version, straight
Double coupling, 8-poles incl. installation frame metal			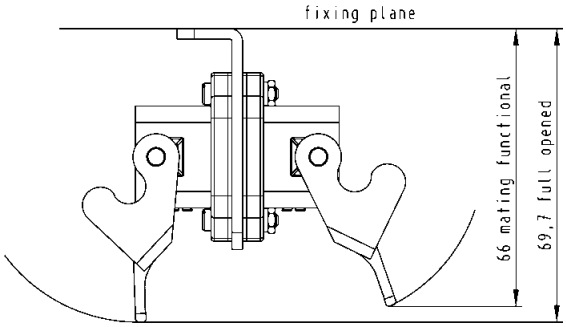
Plastic version, black		09 45 225 1107	
Metal version Standard, grey		09 45 215 1107	
Metal version M, black		09 45 215 1110	
Coding pin set for 4 different codings		09 45 820 0000	Dimensions valid for plastic version
Protection cover for panel feed-through IP65 / IP67 with seal			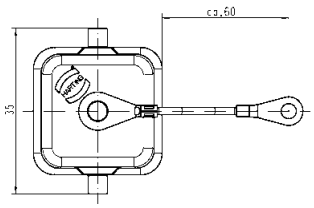
Plastic version, black		09 20 003 5449	
Metal version Standard, grey		09 20 003 5425	
Metal version M, black		09 37 003 5405	Dimensions valid for plastic version