P-DUKE POWER

MAD30 Series

AC-DC POWER SUPPLIES
Up to 30 Watts

5 YEARS WARRANTY

RoHS COMPLIANT

REACH COMPLIANT

+85°C / -40°C AMBIENT TEMP.

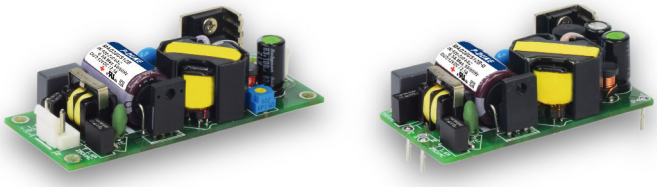

Medical
Automation
Datacom
IPC
Industry
Measurement
Telecom
Automobile
Boat
Charger
PV
Railway

c UL us CB CE FC

POWER SAVE

2 x MOPP | 4000 VAC Reinforced Insulation | ADJ. Output Voltage | Internal EN55032 Class B Filter | LOW Standby Power | LOW Leakage Current | Operating Altitude 5000 meter | Protection Class I Class II | OCP | OVP | SCP

PART NUMBER STRUCTURE

M	A	D	30	U	S	12	B	-	□	□
Application	**Package Code**	**Dimension Code**	**Output Power (W)**	**Input Voltage (VAC)**	**Output Quantity**	**Output Voltage (VDC)**	**Protection Type**		**Connector Options**	**Conformal Coating Options**
Medical Application	**A:**Open type			**U:** Universal 85 ~ 264	**S:**Single	**3P3:**3.3 **05:**5 **7P5:**7.5 **09:**9 **12:**12 **121:**12 **15:**15 **151:**15 **18:**18 **24:**24 **28:**28 **36:**36 **48:**48 **53:**53	**□:**CLASS I **B:**CLASS II		**□:** JST **M:** Molex **T:** Terminal Block **D:** Pin Type* *(Only for CLASS II)	**□:** None **R:** Conformal Coating

TECHNICAL SPECIFICATION All specifications are typical at 230VAC input, full load and 25℃ unless otherwise noted

Model Number	Input Range	Output Voltage	Output Current Natural Convection	Max. Output Power	Input Power @No Load	Efficiency	Maximum Capacitor Load
	VAC	VDC	A	W	mW	%	μF
MAD30US3P3B	85 ~ 264	3.3	6	20	40	84	10000
MAD30US05B	85 ~ 264	5	6	30	40	87	12000
MAD30US7P5B	85 ~ 264	7.5	4	30	40	87	5340
MAD30US09B	85 ~ 264	9	3.34	30	40	88	3720
MAD30US12B	85 ~ 264	12	2.5	30	40	90.5	2085
MAD30US121B	85 ~ 264	12	2.5	30	40	88	2085
MAD30US15B	85 ~ 264	15	2	30	40	90.5	1350
MAD30US151B	85 ~ 264	15	2	30	40	88	1350
MAD30US18B	85 ~ 264	18	1.67	30	40	88	930
MAD30US24B	85 ~ 264	24	1.25	30	40	89.5	520
MAD30US28B	85 ~ 264	28	1.08	30	40	89.5	385
MAD30US36B	85 ~ 264	36	0.84	30	40	90	235
MAD30US48B	85 ~ 264	48	0.63	30	40	91.5	130
MAD30US53B	85 ~ 264	53	0.58	30	40	91	109

INPUT SPECIFICATIONS

Parameter	Conditions		Min.	Typ.	Max.	Unit
Operating input voltage range	AC input DC input		85 120		264 370	VAC VDC
Input frequency	AC input		47		63	Hz
Input current	100VAC and Full Load 240VAC and Full Load				0.8 0.4	A
No load input power	230VAC			40		mW
Leakage current	264VAC				100	μA
Start up time					1500	ms
Rise time		Others 24Vout, 28Vout, 36Vout 48Vout, 53Vout		20 40 50		ms
Hold up time	115VAC and Full Load			16		ms
Input inrush current	230VAC			40		A
Input protection	Internal fuse in line and neutral			T1.6A/250VAC		

OUTPUT SPECIFICATIONS

Parameter	Conditions		Min.	Typ.	Max.	Unit
Output power					30	Watts
Initial set voltage accuracy	230VAC and Full Load		-1.0		+1.0	%
Line regulation	Low Line to High Line at Full Load		-0.2		+0.2	%
Load regulation	No Load to Full Load	3.3Vout, 5Vout Others	-0.7 -0.5		+0.7 +0.5	%
	10% Load to 90% Load	3.3Vout, 5Vout Others	-0.6 -0.4		+0.6 +0.4	
Voltage adjustability			-10		+10	%
Minimum load				0		%
Ripple and noise	Measured by 20MHz bandwidth With a 10μF/25V 1206 X7R MLCC With a 1μF/50V 1206 X7R MLCC With a 0.1μF/100V 1206 X7R MLCC	3.3Vout, 5Vout, 7.5Vout, 9Vout 12Vout, 15Vout, 18Vout 24Vout, 28Vout, 36Vout 48Vout,53Vout		50 50 50 50 50		mVp-p
Temperature coefficient			-0.02		+0.02	%/℃
Transient response	Load step from 50 ~ 75% change at 2.5A/μs	Peak deviation Recovery time		500	3	%Vout μs
Over voltage protection	% of Vout(nom); Automatics recovery		125		140	%
Over load protection	% of Iout rated; Hiccup mode			140		%
Short circuit protection				Continuous, automatics recovery		

GENERAL SPECIFICATIONS

Parameter	Conditions		Min.	Typ.	Max.	Unit
Isolation voltage	1 minute (2MOPP insulation)	Input to Output	4000			VAC
Isolation resistance	500VDC		0.1			GΩ
Switching frequency	230VAC and Full Load		30	45	60	kHz
Safety approvals	IEC/ EN/ ANSI/AAMI ES 60601-1 IEC/ EN/ UL 62368-1				UL:E360199 UL:E193009 CB:UL(Demko)	
Weight		Connector type Pin type			60.5g (2.13oz) 58.0g (2.05oz)	
MTBF	MIL-HDBK-217F, Full load				3.341 x 10^6 hrs	

ENVIRONMENTAL SPECIFICATIONS

Parameter	Conditions		Min.	Typ.	Max.	Unit
Operating ambient temperature	Natural convection	With derating	-40		+85	℃
Storage temperature range			-40		+85	℃
Operating altitude					5000	m
Shock					IEC60068-2-27	
Vibration					IEC60068-2-6	
Relative humidity	Non-condensing				5% to 95% RH	

EMC SPECIFICATIONS

Parameter	Conditions		Level
EMI	EN55011, EN55032, EN60601-1-2 and FCC Part 18 / 15		Conducted Class B Radiated Class B
Harmonic currents	EN61000-3-2	Full Load	Class A
Voltage flicker	EN61000-3-3		
EMS	EN55024 and EN60601-1-2		
ESD	EN61000-4-2		Perf. Criteria A
Radiated immunity	EN61000-4-3	20 V/m	Perf. Criteria A
Fast transient	EN61000-4-4	± 2kV	Perf. Criteria A
Surge	EN61000-4-5	DM ± 1kV	Perf. Criteria A
Conducted immunity	EN61000-4-6	20 Vr.m.s	Perf. Criteria A
Power frequency magnetic field	EN61000-4-8	30 A/m	Perf. Criteria A
Dip and interruptions	EN61000-4-11		

CHARACTERISTIC CURVE

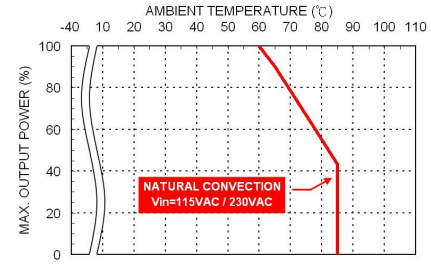

Derating Curve vs. Ambient Temperature
MAD30USxxB xx=3P3/05/7P5/09/121/151/18
Connector Option：(□: JST)

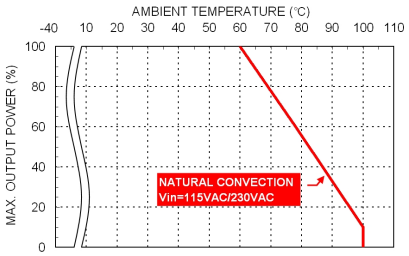

Derating Curve vs. Ambient Temperature
MAD30USxxB xx=3P3/05/7P5/09/121/151/18
Connector Option：(-M / -T / -D)

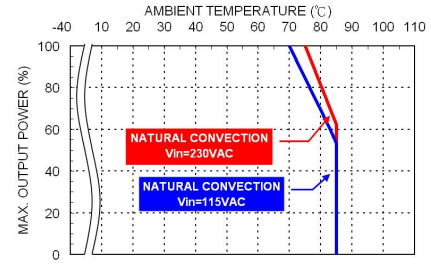

Derating Curve vs. Ambient Temperature
MAD30USxxB xx=12/15/24/28/36/48/53
Connector Option：(□: JST)

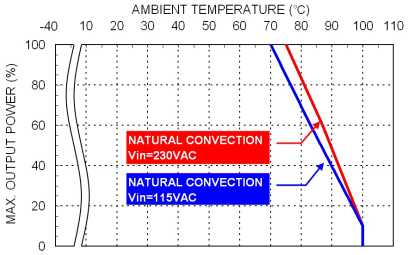

Derating Curve vs. Ambient Temperature
MAD30USxxB xx=12/15/24/28/36/48/53
Connector Option：(-M / -T / -D)

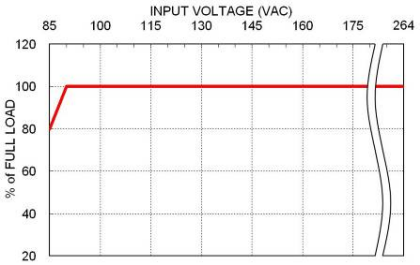

Derating Curve vs. Input Voltage

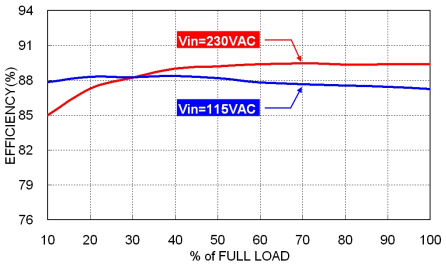

MAD30US24B Efficiency vs. Output Load

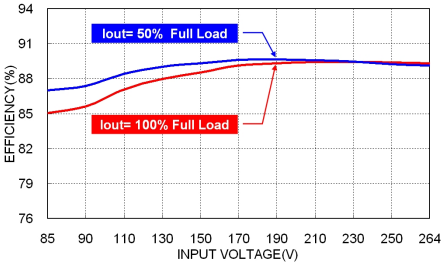

MAD30US24B Efficiency vs. Input Voltage

MECHANICAL DRAWING

MAD Connector type

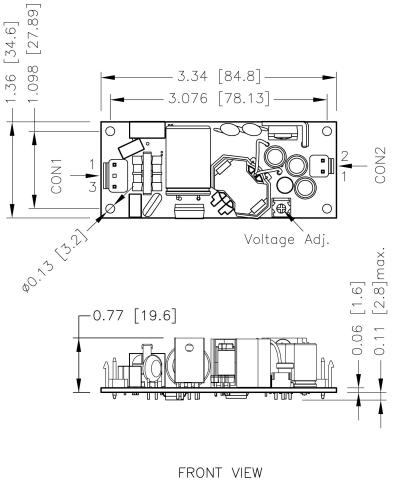

CONNECTORS CONNECTIONS

CON1 – Input Connector

Pin 1	Line
Pin 3	Neutral

CON2 – Output Connector

Pin 1	+Vout
Pin 2	-Vout

1.All dimensions in inch [mm]
Tolerance : x.xx±0.02 [x.x±0.5]
x.xxx±0.010 [x.xx±0.25]
2.The screw locked torque: MAX 5.0kgf-cm/0.49N-m

*Either one of four screw holes of Open / Chassis type can be considered as PE connection for CLASS I application

CONNECTOR OPTIONS

Blank: JST Type



Housing
CON1: **VHR-3N**
CON2: **VHR-2N**

Crimp terminals
CON1: **SVH-21T-P1.1**
CON2: **SVH-21T-P1.1**

-M Molex Type



Housing
CON1: **09-50-8031**
CON2: **09-50-8021**

Crimp terminals
CON1: **SD-2478**
CON2: **SD-2478**

-T Terminal Block



Mates with
Screw locked torque
MAX 2Kgf.cm/0.2N.m

Wire dimension range
26 ~ 16AWG

MECHANICAL DRAWING

MAD –**D** Pin type

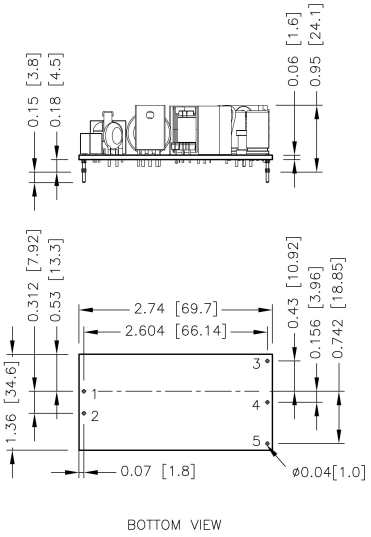

PIN CONNECTION

PIN	SINGLE
1	Neutral
2	Line
3	+Vout
4	-Vout
5	Trim

1. All dimensions in inch [mm]
2. Tolerance :x.xx±0.02 [x.x±0.5]
   x.xxx±0.010 [x.xx±0.25]
3. Pin pitch tolerance ±0.010 [0.25]
4. Pin dimension tolerance ±0.004[0.10]

RECOMMENDED PAD LAYOUT

MAD –**D** Pin type

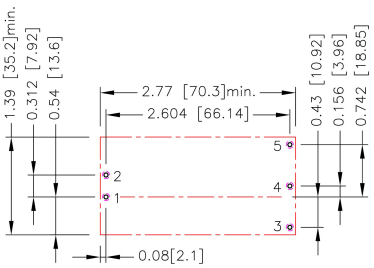

All dimensions in inch[mm]
Pad size(lead free recommended)
Through hole 1.2.3.4.5: Φ0.051[1.30]
Top view pad 1.2.3.4.5: Φ0.064[1.63]
Bottom view pad 1.2.3.4.5: Φ0.102[2.60]

OUTPUT VOLTAGE ADJUSTMENT

It allows the user to increase or decrease the output voltage of the module.
This is accomplished by connecting an external resistor between the Trim pin and either the +Vout or -Vout pins.
With an external resistor between the Trim and -Output pin, the output voltage increases.
With an external resistor between the Trim and +Output pin, the output voltage decreases.
The external Trim resistor needs to be at least 1/16W of rated power.

■ Trim Up Equation

$$R_U = \left[\frac{G \times L}{(V_{o,up} - L - K)} - H \right] \Omega$$

■ Trim Down Equation

$$R_D = \left[\frac{(V_{o,down} - L) \times G}{(V_o - V_{o,down})} - H \right] \Omega$$

■ Trim Constants

Module	G	H	K	L
MAD30US3P3B-D	5100	2050	0.8	2.5
MAD30US05B-D	7500	2000	2.5	2.5
MAD30US7P5B-D	22000	2000	5	2.5
MAD30US09B-D	33000	2000	6.5	2.5
MAD30US12B-D	51000	2000	9.5	2.5
MAD30US15B-D	68000	2000	12.5	2.5
MAD30US18B-D	91000	2000	15.5	2.5
MAD30US24B-D	130000	2000	21.5	2.5
MAD30US28B-D	160000	2000	25.5	2.5
MAD30US36B-D	220000	2000	33.5	2.5
MAD30US48B-D	620000	2000	45.5	2.5
MAD30US53B-D	680000	2000	50.5	2.5

EXTERNAL OUTPUT TRIMMING

Output can be externally trimmed by using the method shown below.

Trim-up

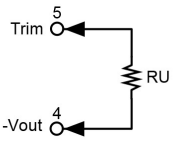

US3P3B-D

△V	(%)	1	2	3	4	5	6	7	8	9	10
Vout	(V)	3.333	3.366	3.399	3.432	3.465	3.498	3.531	3.564	3.597	3.630
RU	(kΩ)	384.314	191.132	126.738	94.541	75.223	62.344	53.145	46.245	40.879	36.586

US05B-D

△V	(%)	1	2	3	4	5	6	7	8	9	10
Vout	(V)	5.050	5.100	5.150	5.200	5.250	5.300	5.350	5.400	5.450	5.500
RU	(kΩ)	373.000	185.500	123.000	91.750	73.000	60.500	51.571	44.875	39.667	35.500

US7P5B-D

△V	(%)	1	2	3	4	5	6	7	8	9	10
Vout	(V)	7.575	7.650	7.725	7.800	7.875	7.950	8.025	8.100	8.175	8.250
RU	(kΩ)	731.333	364.667	242.444	181.333	144.667	120.222	102.762	89.667	79.481	71.333

US09B-D

△V	(%)	1	2	3	4	5	6	7	8	9	10
Vout	(V)	9.090	9.180	9.270	9.360	9.450	9.540	9.630	9.720	9.810	9.900
RU	(kΩ)	914.667	456.333	303.556	227.167	181.333	150.778	128.952	112.583	99.852	89.667

US12B-D

△V	(%)	1	2	3	4	5	6	7	8	9	10
Vout	(V)	12.120	12.240	12.360	12.480	12.600	12.720	12.840	12.960	13.080	13.200
RU	(kΩ)	1060.500	529.250	352.167	263.625	210.500	175.083	149.786	130.813	116.056	104.250

US15B-D

△V	(%)	1	2	3	4	5	6	7	8	9	10
Vout	(V)	15.150	15.300	15.450	15.600	15.750	15.900	16.050	16.200	16.350	16.500
RU	(kΩ)	1131.333	564.667	375.778	281.333	224.667	186.889	159.905	139.667	123.926	111.333

OUTPUT VOLTAGE ADJUSTMENT(CONTINUED)

Trim-up

US18B-D

△V	(%)	1	2	3	4	5	6	7	8	9	10
Vout	(V)	18.180	18.360	18.540	18.720	18.900	19.080	19.260	19.440	19.620	19.800
RU	(kΩ)	1261.889	629.944	419.296	313.972	250.778	208.648	178.556	155.986	138.432	124.389

US24B-D

△V	(%)	1	2	3	4	5	6	7	8	9	10
Vout	(V)	24.240	24.480	24.720	24.960	25.200	25.440	25.680	25.920	26.160	26.400
RU	(kΩ)	1352.167	675.083	449.389	336.542	268.833	223.694	191.452	167.271	148.463	133.417

US28B-D

△V	(%)	1	2	3	4	5	6	7	8	9	10
Vout	(V)	28.280	28.560	28.840	29.120	29.400	29.680	29.960	30.240	30.520	30.800
RU	(kΩ)	1426.571	712.286	474.190	355.143	283.714	236.095	202.082	176.571	156.730	140.857

US36B-D

△V	(%)	1	2	3	4	5	6	7	8	9	10
Vout	(V)	36.360	36.720	37.080	37.440	37.800	38.160	38.520	38.880	39.240	39.600
RU	(kΩ)	1525.778	761.889	507.259	379.944	303.556	252.630	216.254	188.972	167.753	150.778

US48B-D

△V	(%)	1	2	3	4	5	6	7	8	9	10
Vout	(V)	48.480	48.960	49.440	49.920	50.400	50.880	51.360	51.840	52.320	52.800
RU	(kΩ)	3227.167	1612.583	1074.389	805.292	643.833	536.194	459.310	401.646	356.796	320.917

US53B-D

△V	(%)	1	2	3	4	5	6	7	8	9	10
Vout	(V)	53.530	54.060	54.590	55.120	55.650	56.180	56.710	57.240	57.770	58.300
RU	(kΩ)	3205.547	1601.774	1067.182	799.887	639.509	532.591	456.221	398.943	354.394	318.755

Trim-down

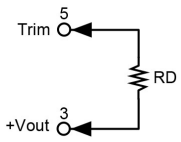

US3P3B-D

△V	(%)	1	2	3	4	5	6	7	8	9	10
Vout	(V)	3.267	3.234	3.201	3.168	3.135	3.102	3.069	3.036	3.003	2.970
RD	(kΩ)	116.486	54.668	34.062	23.759	17.577	13.456	10.512	8.305	6.587	5.214

US05B-D

△V	(%)	1	2	3	4	5	6	7	8	9	10
Vout	(V)	4.950	4.900	4.850	4.800	4.750	4.700	4.650	4.600	4.550	4.950
RD	(kΩ)	365.500	178.000	115.500	84.250	65.500	53.000	44.071	37.375	32.167	365.500

US7P5B-D

△V	(%)	1	2	3	4	5	6	7	8	9	10
Vout	(V)	7.425	7.350	7.275	7.200	7.125	7.050	6.975	6.900	6.825	6.750
RD	(kΩ)	1442.667	709.333	464.889	342.667	269.333	220.444	185.524	159.333	138.963	122.667

US09B-D

△V	(%)	1	2	3	4	5	6	7	8	9	10
Vout	(V)	8.910	8.820	8.730	8.640	8.550	8.460	8.370	8.280	8.190	8.100
RD	(kΩ)	2348.333	1156.667	759.444	560.833	441.667	362.222	305.476	262.917	229.815	203.333

US12B-D

△V	(%)	1	2	3	4	5	6	7	8	9	10
Vout	(V)	11.880	11.760	11.640	11.520	11.400	11.280	11.160	11.040	10.920	10.800
RD	(kΩ)	3984.500	1965.750	1292.833	956.375	754.500	619.917	523.786	451.688	395.611	350.750

US15B-D

△V	(%)	1	2	3	4	5	6	7	8	9	10
Vout	(V)	14.850	14.700	14.550	14.400	14.250	14.100	13.950	13.800	13.650	13.500
RD	(kΩ)	5596.667	2763.333	1818.889	1346.667	1063.333	874.444	739.524	638.333	559.630	496.667

OUTPUT VOLTAGE ADJUSTMENT(CONTINUED)

Trim-down

US18B-D

△V	(%)	1	2	3	4	5	6	7	8	9	10
Vout	(V)	17.820	17.640	17.460	17.280	17.100	16.920	16.740	16.560	16.380	16.200
RD	(kΩ)	7743.111	3825.056	2519.037	1866.028	1474.222	1213.019	1026.444	886.514	777.679	690.611

US24B-D

△V	(%)	1	2	3	4	5	6	7	8	9	10
Vout	(V)	23.760	23.520	23.280	23.040	22.800	22.560	22.320	22.080	21.840	21.600
RD	(kΩ)	11513.833	5690.917	3749.944	2779.458	2197.167	1808.972	1531.690	1323.729	1161.981	1032.583

US28B-D

△V	(%)	1	2	3	4	5	6	7	8	9	10
Vout	(V)	27.720	27.440	27.160	26.880	26.600	26.320	26.040	25.760	25.480	25.200
RD	(kΩ)	14409.429	7123.714	4695.143	3480.857	2752.286	2266.571	1919.633	1659.429	1457.048	1295.143

US36B-D

△V	(%)	1	2	3	4	5	6	7	8	9	10
Vout	(V)	35.640	35.280	34.920	34.560	34.200	33.840	33.480	33.120	32.760	32.400
RD	(kΩ)	20250.222	10014.111	6602.074	4896.056	3872.444	3190.037	2702.603	2337.028	2052.691	1825.222

US48B-D

△V	(%)	1	2	3	4	5	6	7	8	9	10
Vout	(V)	47.520	47.040	46.560	46.080	45.600	45.120	44.640	44.160	43.680	43.200
RD	(kΩ)	58148.833	28763.417	18968.278	14070.708	11132.167	9173.139	7773.833	6724.354	5908.093	5255.083

US53B-D

△V	(%)	1	2	3	4	5	6	7	8	9	10
Vout	(V)	52.470	51.940	51.410	50.880	50.350	49.820	49.290	48.760	48.230	47.700
RD	(kΩ)	64110.453	31714.226	20915.484	15516.113	12276.491	10116.742	8574.065	7417.057	6517.161	5797.245

P-DUKE

P-DUKE Technology Co., Ltd.

Tel +886-4-2359-0668
Fax +886-4-2359-1337
Email sale@pduke.com
Web www.pduke.com
Add No. 36, 22nd Rd., Taichung Industrial Park, Taichung, Taiwan, R.O.C.