REV.	ECN NO.	DATE	SIGN	DESCRIPTION
B	LEN14C0044	2014/11/24	Vicky	Update Logo & Dimension

ALTW
CONFIDENTIAL
2014-11-24
R&D DEPT.

ALTW
DCC. DEPT.
CONFIDENTIAL
2014.12.03
ISSUED

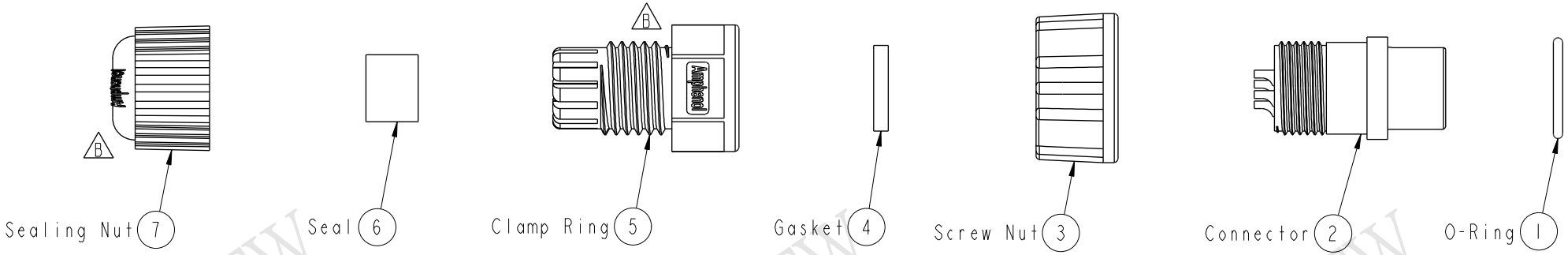

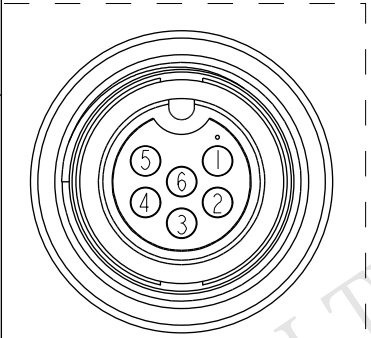

Pin Assignments
Front View

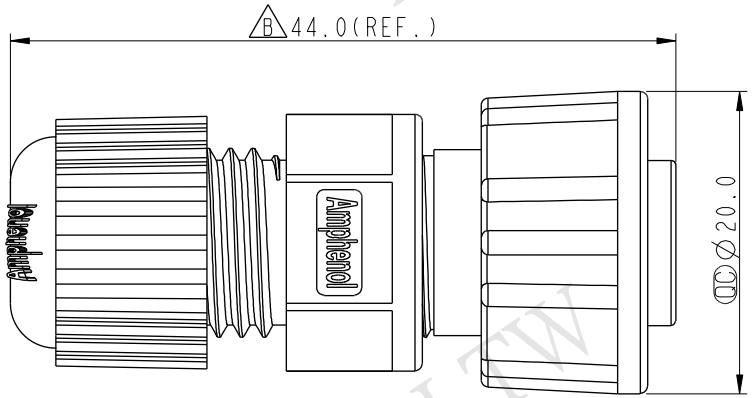

Note:
* QC Important Dimension To Check.
* Waterproof Rate: IP67
* Housing: Nylon+GF, Black
* Male Pin: Copper Alloy, Gold Plated
* O-Ring: EPDM, Black
* Screw Nut: Nylon+GF, Black
* Gasket: EPDM, Black
* Clamp Ring: Nylon, Black
* Seal: EPDM, Black
* Sealing Nut: Nylon, Black
* Seal For Cable OD: ∅4.5mm~∅6.5mm
  (防水墊圈線徑:∅4.5mm~∅6.5mm)
* One Set Unassembled In One PE Bag
  (每一組未組裝,放置於一個PE袋,並封口)

UNIT:mm

TOLERANCE
.X ±0.25
.XX ±0.1
.XXX ±0.05
ANGLES ±1°

TITLE	Standard Assy Screw 6P F Conn M Pin		
SCALE 5:4	SIZE A4	SHEET 1 OF 1	
REV. B	WC-REV. A.2	QC: Inspection item	

Amphenol LTW
安費諾亮泰企業股份有限公司

ITEM NO BD-06BFMA-SL7001	DRAWN BY Vicky	DATE 2014-11-24
DWG NO BD-06BFMA-SL7001	CHECKED BY Sam	DATE 2014-11-24
CUSTOMER ALTW	APPROVED BY Rita	DATE 2014-11-24

FMW10702-01-02A1

THIS DOCUMENT IS SUBJECT TO CHANGE WITHOUT NOTICE. IT IS CONFIDENTIAL AND A PROPERTY OF Amphenol LTW. DISCLOSURE TO THIRD PARTY HAS TO BE AUTHORIZED BY Amphenol LTW.