dialog SEMICONDUCTOR

Automotive

January 2020

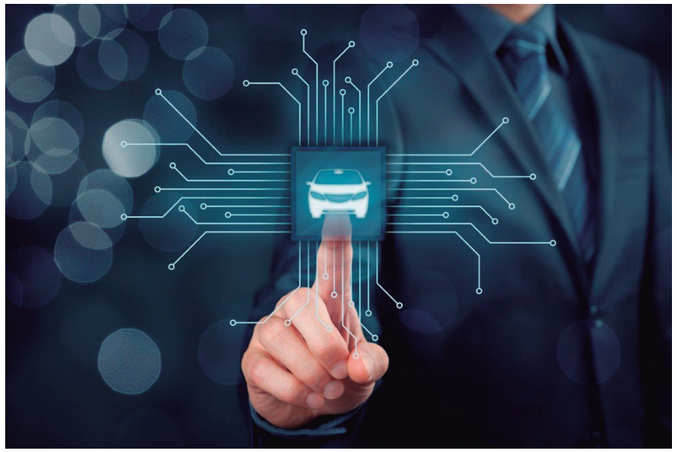

PREMIER AUTOMOTIVE SUPPLIER

Heritage

Dialog Semiconductor has a long-established position as a premium supplier of automotive integrated circuits (ICs). Originally formed as a spin-out of Daimler-Benz, Dialog supplies a broad range of ICs to the automotive industry and is already a qualified supplier to leading OEMs in Europe and Asia Pacific.

Automotive Qualified Solutions

Dialog's innovative solutions improve performance and reduce system costs and PCB area. Committed to delivering superior products with the goal of zero defects, all automotive products are qualified to AEC-Q100 standards to meet the stringent quality and reliability needs of the Automotive industry. Additionally, Dialog's manufacturing partners maintain TS16949 automotive quality standard certification.

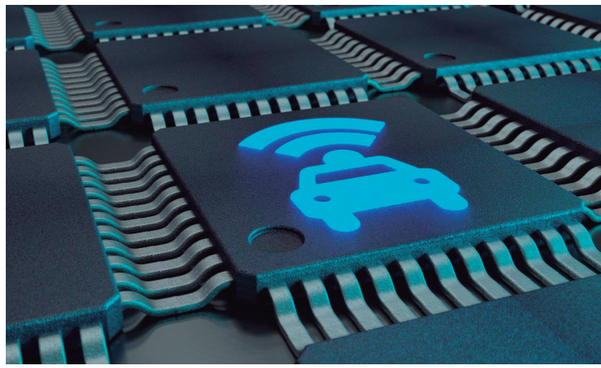

Assurance of Product Supply for Automotive

Dialog understands the extended life-cycle requirements of automotive customers and provides assurance of supply through its Product Longevity Program (PLP). Availability of Dialog's automotive products is managed under the PLP which ensures availability for a minimum of 15 years from product launch. For more details on PLP program, visit www.dialog-semiconductor.com/longevity-program

Development Support

Dialog provides regionally and locally based expertise and technical support to accelerate its customers' design cycles. Each region also has dedicated quality teams offering expert advice and guidance.

Contents

In-Cabin Electronics and Chassis & Safety
Power Management ICs ..... Page 05
LED Backlight Drivers ..... Page 10
Configurable Mixed-signal ICs ..... Page 14

Body and Security
Bluetooth® low energy ..... Page 16

In-Cabin Electronics

Power Management ICs (PMICs)

Flexible, scalable, high-efficiency solutions, enable a fast-response, mobile phone-like experience for infotainment systems and instrument clusters

GreenPAK™ Configurable Mixed-signal ICs (CMICs)

Configurable solutions enable flexible electronic designs while reducing BoM count, cost, and sourcing issues

Body and Security

Bluetooth® low energy

Time-of-Flight (ToF) and Angle-of-Arrival (AoA) localization capabilities enable trusted access for remote keyless entry

Lowest power, lowest footprint solutions enable expanded capabilities for Tire Pressure Monitoring Systems (TPMS)

LED Backlight Drivers

Advanced technology solutions enable local dimming, high-contrast, high-quality, large displays

Chassis and Safety

Power Management ICs (PMICs)

High-current, high-efficiency solutions enable optimal thermal management forhigh-performance SoC based ADAS applications

GreenPAK™ Configurable Mixed-signal ICs (CMICs)

Integrated, flexible devices enable lower system failure rate, and smallest footprint for area constrained ADAS applications

Power Management ICs (PMICs)

Flexibility and scalability now come as standard (PMICs)

To meet the demanding power management, energy efficiency and reliability needs of today's vehicle manufacturers and system suppliers, Dialog supplies a comprehensive range of automotive-qualified System Power Management Integrated Circuits (System PMICs) and Subsystem Power Management ICs (Sub-PMICs).

Power Management ICs (System and Sub-PMICs)

Dialog's flexible, highly integrated solutions are optimized to support multiple SoC platforms with low component count and cost. Each system comprises a system PMIC and, depending on the applications power requirements, an optional Sub-PMIC. Both the System and Sub-PMICs have high current converters as standard and provide designers the flexibility to quickly and cost-effectively design power management solutions that enable maximum system performance while meeting size and thermal constraints.

Flexibility and scalability

Dialog's scalable archictecture offers its customers the powerful time and cost saving advantages of flexibility and scalability. Customers can utilize the same PMIC and Sub-PMIC combination for multiple SoC platforms with a simple firmware update.

Realizing economies of scale

Fully integrated switches within these devices remove the need for costly, space-consuming external components and significantly reduce circuit complexity and the total bill of materials. Dialog's PMIC families utilize high switching frequency converters, which enable the use of low profile inductors and smaller capacitors to optimize printed circuit board area and height.

Dynamic voltage scaling

Advanced power management techniques such as automatic phase shedding and reprogrammable power sequencing come as standard features with Dialog products - all adding up to lower power consumption and higher system efficiency at no extra cost. DVS - dynamically adjustable voltage scaling - allows for lower voltage operation of the SoC, FPGA or processor in real time.

Applications

Dialog's highly efficient automotive PMICs are ideal for any cost and area optimized in-cabin or driver-assist SoC based system requiring cost effective, high current power management. Applications include, infotainment, instrument cluster, navigation, telematics and advanced driver-assistance systems (ADAS).

ACCELERATE YOUR NEXT GENERATION AUTOMOTIVE PLATFORM DESIGN

Discover the benefits of Dialog's highly integrated Automotive PMICs with powerful built-in configurability engines.

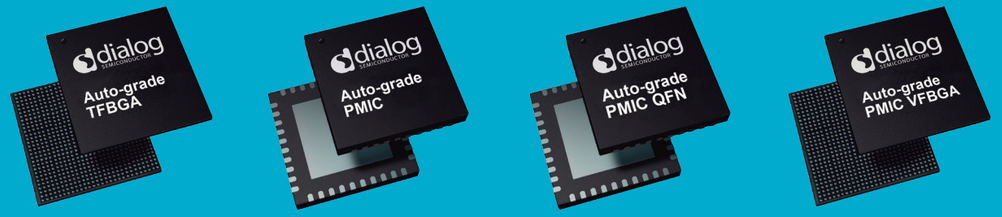

Auto-Grade System PMIC Product Portfolio

Part	Description	Grade	Bucks	IMAX (A)	Merged Bucks IMAX (A)	LDO	IMAX (mA)	GPIO	Package	Optimized for
DA9053-A	PMIC for applications requiring up to 2 A	3	4	2	N/A	10	250	16	VFBGA 11 x 11 x 0.8 mm	ARM multi-core devices, associated peripherals and user interface functions
DA9061-A	PMIC for applications requiring up to 6 A	2	3	2.5	N/A	4	300	5	QFN 6 x 6 x 0.5 mm	Qualcomm® Atlas™ VI, Freescale i.MX6-Solo, Atmel® SAMA5
DA9062-A	PMIC for applications requiring up to 8.5 A	2	4	2.5	5	4	300	5	QFN 6 x 6 x 0.5 mm	Qualcomm Atlas 7, Freescale i.MX6-Solo, Xilinx® Zynq® UltraScale™ ZU7, Renesas R-Car E2, Atmel SAMA5
DA9063L-A	High power PMIC for quad-core processors up to 12 A	2	6	2.5	5	5	300	16	BGA 8 x 8 x 0.8 mm	Renesas R-Car H2/M2/H3, Xilinx Zynq UltraScale ZU3/ZU9, Freescale i.MX6
DA9063-A	High power PMIC for quad-core processors up to 12 A	2	6	2.5	5	11	300	16	BGA 8 x 8 x 0.8 mm	Renesas R-Car H2/M2/H3 Xilinx Zynq UltraScale ZU3/ZU9 Freescale i.MX6

Auto-Grade Sub-PMIC Product Portfolio

Part	Description	Grade	Bucks	IMAX (A)	Features	Package	Optimized for
DA9210-A	12 A DC-DC with programmable control	3	1	12	Parallel 24 A	BGA 5.6 x 4.8 x 0.8 mm	Renesas R-Car H2 Freescale i.MX6- Quad
DA9213-A	Multi-phase 20 A output current	2	1	20	4 phases	VFBGA 5.8 x 3.8 x 0.5 mm	Renesas R Car 3
DA9214-A	Multi-phase 2 x 10 A output current	2	2	10	10 + 10 A	VFBGA 5.8 x 3.8 x 0.5 mm	Renesas R Car 3
DA9215-A	Multi phase 1 x 15 and 1 x 5 A output current	2	2	20	15 + 5 A	VFBGA 5.8 x 3.8 x 0.5 mm	Renesas R Car 3
DA9223-A	Multi-phase 16 A output current	2	1	16	4 phases	TFBGA 9.0 x 5.0 x 0.8 mm	Renesas R Car 3
DA9224-A	Multi-phase 2 x 8 A output current	2	2	8	8 + 8 A	TFBGA 9.0 x 5.0 x 0.8 mm	Renesas R Car 3

PMIC and Sub-PMIC solutions for SoCs processor or microcoprocessor platforms

SoC		Renesas														
		R Car 2							R Car 3							
Platform		H2	H2	M2	E2	E2	E2X	V2H	H3	M3	M3N	M3N	V3M	V3H	E3	E3
		ADAS	IVI	IVI	IVI	Cluster	IVI	ADAS	IVI	IVI	IVI	Cluster	ADAS	ADAS	IVI	Cluster
System PMIC	DA9053-A															
	DA9061-A															
	DA9062-A				☑	☑	☑									
	DA9063-A	☑	☑	☑	☑	☑	☑	☑	☑	☑	☑				☑	
	DA9063L-A	☑	☑	☑	☑	☑		☑	☑	☑	☑	☑	☑	☑	☑	☑
Sub-PMIC	DA9210-A	x2	☑	☑							☑	☑				
	DA9213-A								☑		☑	☑		☑	P (VTT/No)	
	DA9214-A								☑	☑						
	DA9223-A								☑							
	DA9224-A								☑	☑						

Dialog PMICs and Sub-PMICs are optimized to work with leading industry SoC processors, FPGA or microprocessor platforms.

SoC		Xilinx				Qualcomm		Freescale/NXP					
Platform		ZU3	ZU5	ZU7	ZU9	Atlas VI	Atlas 7	i.MX53	i.MX6 Solo	i.MX6 DL	i.MX6 Quad	i.MX7	i.MX8M
System PMIC	DA9053-A							☑	☑	☑			
	DA9061-A					☑			☑				
	DA9062-A	☑					☑		☑			☑	☑
	DA9063-A	☑	☑	☑	☑				☑	☑	☑	☑	☑
	DA9063L-A	☑			☑				☑		☑	☑	☑
Sub-PMIC	DA9210-A	☑	☑		☑				☑				
	DA9213-A			☑	☑								
	DA9214-A		☑	☑									
	DA9223-A			☑	☑								
	DA9224-A		☑	☑									

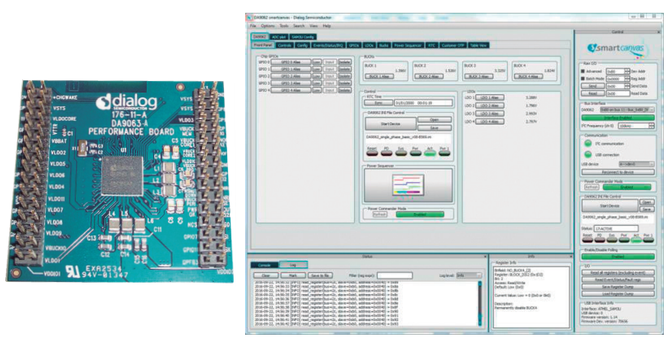

SmartCanvas™

SmartCanvas is a simple to use PC software application, allowing programming of Dialog's PMICs via an I²C bus. This enables last minute changes and the optimization of power sequences and configurations without requiring PCB or physical architecture changes.

LED backlight driver ICs for next-generation automotive displays

Unrivaled Performance at a Lower BOM Cost

Dialog's DC/DC LED backlight drivers provide optimized screen performance in automotive displays, with comprehensive dimming control options that reduce motion blur and improve contrast ratio.

Automotive displays are transitioning from the traditional edge-lit configuration to multi-segment, direct backlighting to provide significant performance improvements, including:

- **Higher dynamic range**
- **Light vectoring (dual display)**
- **Higher reliability**
- **Longer lifetime**

The challenge when using multi-segment, direct backlit displays with conventional LED drivers is that each segment requires its own LED string resulting in a higher BOM cost. The iW7038A features Dialog's patented **BroadLED™** digital backlighting technology, which reduces cost by enabling more channels per LED driver IC. A further advantage in utilizing the iW7038A is the significant reduction in temperature in the event of an LED short-circuit fault; improving display reliability and product lifetime.

The iW7038A also features Dialog's **AnyMode™** technology to reduce motion blur for faster image fade out, improving display picture quality and safety.

Benefits

- **16 channels**
- **Integrated current sink MOSFETs**
- **External current sense resistors for flexibility and accuracy in broad range of I_{LED} applications**
- **Patented BroadLED adaptive switch technology**
  - Reduces power dissipation in the driver
  - Maintains operation during LED short with minimal temperature increase
  - Enables use of less costly, loosely binned LED arrays for lower BOM cost
- **AnyMode technology reduces video motion blur**
- **13-bit PWM dimming and 11-bit analog dimming improve dynamic range**
- **Comprehensive protection features:**
  - Individual LED short protection
  - Channel-to-channel short protection
  - Current sink MOSFET drain-to-source short protection
  - Current sense resistor short protection
  - Microcontroller interrupt interface
  - LED open-fault detection
  - Over-temperature protection

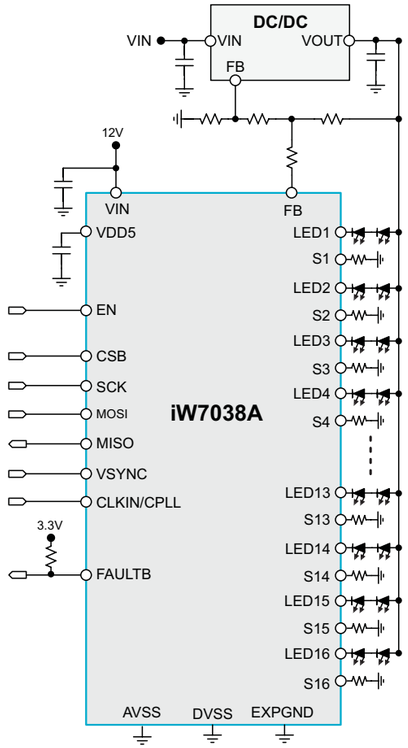

BroadLED™ Digital Technology for Higher Reliability, Lower Cost Backlighting

LED forward voltages vary from LED to LED, which means backlight driver ICs need to drive multiple LED strings, each with a different total forward voltage at the same ILED current. The difference in string voltages requires the "shorter" strings in the array to have a higher voltage drop across the current regulating driver circuits. This results in higher power dissipation and limits the number of LED strings per driver IC. One solution is to reduce the voltage offset across the drivers by utilizing carefully selected binned LED arrays with matched forward voltages, but this adds considerable cost.

Dialog's patented **BroadLED** adaptive switch technology significantly reduces the voltage offset between mismatched LED arrays by automatically increasing current and decreasing PWM duty cycle to keep LED brightness uniform from channel-to-channel. This reduces heat generation and thermal issues and delivers higher system reliability. It also lowers BOM cost by allowing control of more LED strings per driver IC (since less heat needs to be dissipated) and by enabling the use of less costly, loosely binned LED arrays.

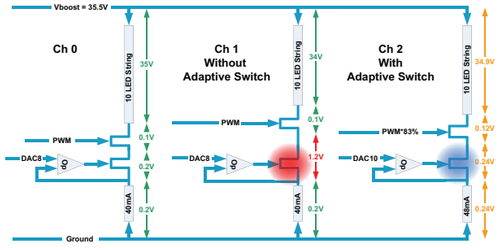

Dialog's patented **BroadLED** adaptive switch technology

BroadLED technology automatically compensates for LED string voltage mismatch

Maintains uniform brightness from channel-to-channel

Reduces power dissipation

Enables use of loosely binned LED arrays for lower BOM cost

Maintains ± 2% channel current matching

AnyMode™ Technology Improves Video Quality and Road Safety

The nature of the way we comprehend visual information from an information screen is complex. Human physiological perception (human visual system - HVS), has the effect of stretching and delaying a short duration of light when viewing a display, resulting in motion blur.

While driving it is critical to reduce motion blur as quickly as possible - especially where urgent decisions based on visual information are required. An example of this is where the driver is quickly alternating between looking at the road and then back and forth to the information screen. It is vital that the driver comprehends the video information as fast as possible.

Dialog's patented **AnyMode** technology offers a comprehensive, and flexible video control which allows the LED display backlights to generate high intensity, short duration pulses, enabling faster image fade-out to enhance contrast ratio and reduce motion blur for safer driving.

GreenPAK™ Configurable Mixed-signal ICs

Driving innovation, reducing size, weight and cost

As the semiconductor content in conventional automotive vehicles continues to grow, GreenPAK NVM programmable devices, allows designers to integrate previously separate functions into the same automotive qualified silicon package. With GreenPAK, designers can quickly reduce system cost and power consumption as well as supply chain and reliability issues.

Fewer Components/Lower Cost

A typical GreenPAK implementation removes from ten to thirty discrete components.

Higher Reliability

Fewer PCB interconnects and ICs reduce reliability issues.

Faster Design to Overcome Last Minute Design Issues

Develop and program devices in minutes at your desk. Quickly respond to changing design requirements and increase productivity at the design and prototype verification stages.

Lower Power

Save power by removing discrete resistors in voltage dividers, pull ups, pull downs, etc. and replacing with low-power, integrated components. Further reduce power consumption using the sleep function.

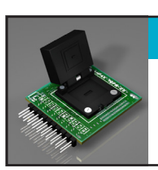

STEP 1

Place unprogrammed GreenPAK into socket

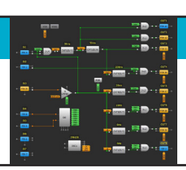

STEP 2

Design your IC with GreenPAK GUI

STEP 3

Click program to freeze GreenPAK's NVM

Program

STEP 4

Your custom IC is ready for use

GreenPAK Configurable Mixed-signal ICs for Automotive

Part Number	Description	GPIOs	Digital	Analog	Timing	Comms	Package
SLG46620-A	Analog Rich GreenPAK	18	26 LUTs/12DFF 3DCMP/3PWM, 12DFF/ Latch	6ACMP, 1ADC, 2DACs	3PWM, 2 Pipe Delays, 10 Counter/Delay	SPI	TSSOP-20 (6.5x6.4mm)
SLG46827-A	GreenPAK with MTP In-System-Debug feature	17	17DFF/Latch, 19 LUTs	4ACMP, 1 Temp Sense	8 Counter, 1 Pipe Delay	I²C	TSSOP-20 (6.5x6.4mm)
SLG46855-A	Small Footprint, Low Power GreenPAK	12	23 LUTs, 21 DFF/Latch	4ACMP	8 CNT/DLY, 1 Pipe Delay	I²C	TQFN – 14 (3x3mm)

Using Dialog's GreenPAK Designer Software and GreenPAK Development Kit, designers can create and program a custom circuit in minutes.

Create hundreds of automotive qualified custom ICs to address your unique system needs.

Head Unit User Interface

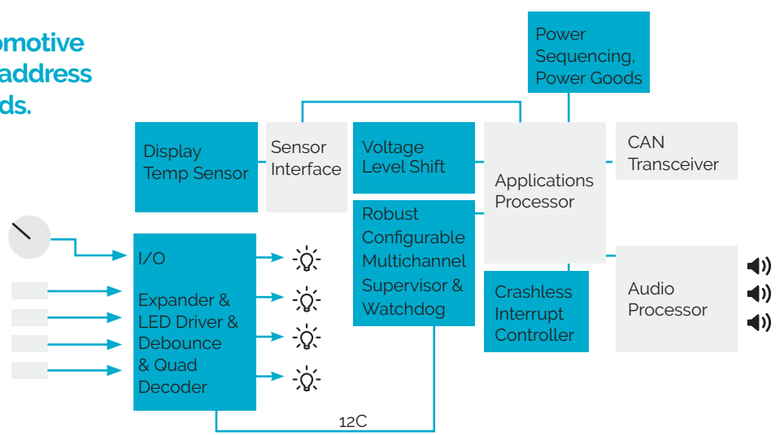

Example of functions that can be integrated into a GreenPAK

Body and Security

The automotive industry is embracing Bluetooth low energy (BLE) as the new wireless standard to connect a variety of car functions, replacing several low frequency RF systems, thereby reducing weight, complexity and cost - a worldwide standard that provides the added benefits of secure two-way communication and smartphone connectivity.

Advantages in utilizing 2.4 GHz BLE to replace sub-GHz radios include:

- **Low cost**
- **Low power**
- **High security**
- **Firmware upgradable**
- **International standard**
- **Connectivity to car central computer via single node for all Bluetooth LE functions**
- **Connectivity to user smartphone**

Reliability is key in the automotive world, but at the same time there is also a requirement to reduce cost. Dialog Bluetooth LE ICs offer this reliability for lowest cost and lowest power consumption – vital for battery operated functions that cannot be supplied by the car's internal power system.

Bluetooth LE technology also improves security against unwanted access to the car's systems, without sacrificing user comfort.

With today's Bluetooth LE portfolio Dialog offers automotive solutions for any BLE application including Tire Pressure Monitoring Systems (TPMS) and Keyless Entry. These systems can also be leveraged to control other functions such as car auxiliary heating and garage door opening.

TPMS

Dialog Semiconductor addresses the TPMS market with the DA145xxA family of BLE Systems-on-Chip (SoCs) featuring the lowest cost and lowest power performance in its class. Dialog's BLE SoC handles the entire data processing and communication required for the TPMS application with no additional microcontroller needed. To build a complete TPMS system, only a Pressure/Temperature/Acceleration (PTA) sensor needs to be added. Each wheel incorporates a TPMS sensor, which measures tire pressure, wheel rotation and temperature. This information is transmitted to the car central computer via Bluetooth low energy connectivity and in the case of exceeding safety limits, the driver receives a clear warning.

Keyless entry

Keyless entry, also known as passive entry, passive start (PEPS), is available on many cars today. The vehicle is opened and closed by a key fob, and the same device enables starting the engine.

The localization capabilities that Dialog offers for Bluetooth low energy applications, including Received Signal Strength Indicator (RSSI), time-of-flight distance ranging and angle-of-arrival direction finding, has the potential to add an extra layer of security to keyless entry solutions by triggering key authentication based on the proximity of the key fob to the car.

Dialog Semiconductor addresses the keyless entry market with its DA14693A - the industry' most advanced connectivity MCU capable of handling the entire processing task required for keyless entry applications, while offering the lowest power consumption in its class.

Bluetooth low energy wireless system on chips (SoCs)

DA145xxA cost-optimized, ultra-low power BLE SoCs

These devices offer compact, highly integrated BLE connectivity with ARM Cortex M0+ processor core to efficiently handle secure, encrypted communication and to execute the user's own application code. A full range of analog and digital interfaces enable direct connection of sensors and control switches. On-chip voltage regulators allow direct connection to a wide variety of battery types.

Features

- Bluetooth 5.0 and 5.1 compliant (core specification)
- 1 Mbps data rate 2.4 GHz radio with up to +3dBm output power
- Arm Cortex M0+ processor core
- HW encryption accelerator
- Store application code on 32kB of OTP or external SPI Flash memory
- Complete set of analog and digital interfaces

Benefits

- Smallest device footprint
- Lowest bill of materials for automotive BLE solution
- Ultra-low power consumption
- Encrypted BLE communication
- Processor for low to medium complexity user applications

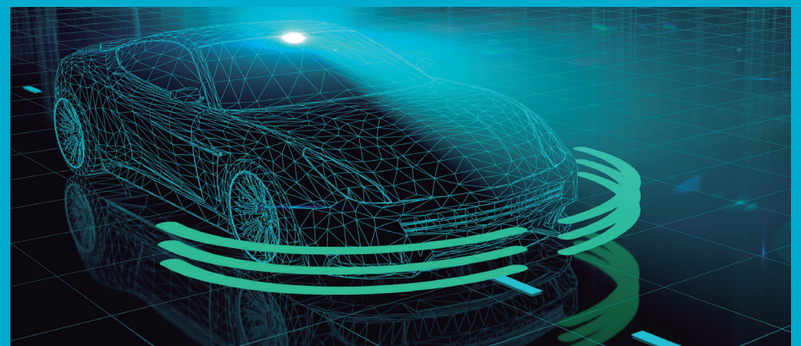

DA14693A high performance BLE Connectivity MCU for Automotive

For next-generation automotive Bluetooth low energy solutions without compromising functionality or battery life, Dialog's SmartBond™ DA14693A provides highly integrated application processing and low power connectivity.

This highly integrated solution supports the Bluetooth 5.1 standard. Its configurable protocol engine (CMAC) enables upgrading of the Bluetooth stack to support future developments of the Bluetooth standard, making the DA14693A a future-proof device.

The ARM® Cortex™ M33™ application processor with floating-point unit, delivers flexible processing power when needed and saves power when it's not, enabling the management of multi-sensor arrays and always-on sensing with its on-board sensor hub. A dedicated hardware crypto engine delivers banking-level security with end-to-end encryption to safeguard sensitive data. Advanced direction finding and distance measurement features can be supported with this SoC.

Features

- Bluetooth 5.1 compliant (core and optional specification), Bluetooth 5.x upgradeable
- Configurable MAC with embedded Cortex M0+ to execute protocol tasks
- Arm Cortex M33™ application processor with floating-point unit for advanced data processing
- Connect up to 64MB of external QSPI Flash memory. Execute encrypted code directly from Flash.
- Dedicated hardware cryptography engine, including AES256 and FIPS1402 compliant TRNG
- Integrated system PMIC for regulated power supply to external components
- 1 or 2Mbps radio with up to +6dBm output power
- Rich set of analog and digital peripherals

Benefits

- Processing power on-demand
- Unlimited execution space
- Capable of running advanced proximity and localization algorithms
- Advanced interfaces for voice commands and audio support
- Sensor hub functionality
- On-chip PMIC can power complete connected sensor system
- High-level security
- Future-proof
- Optimized for highest flexibility, low power consumption, small footprint and low system cost

Dialog Semiconductor Worldwide Sales Offices - www.dialog-semiconductor.com info@diasemi.com

United Kingdom
+44 1793 757 700

Germany
+49 7021 8050

The Netherlands
+31 73 640 8822

North America
+1 408 845 8500

Japan
+81 3 5769 5100

Taiwan
+886 2 80718888

Hong Kong
+852 3769 5200

Korea
+82 2 3469 8200

China (Shenzhen)
+86 755 2981 3669

China (Shanghai)
+86 21 5424 9058

This publication is issued to provide outline information only, which unless agreed by Dialog Semiconductor may not be used, applied, or reproduced for any purpose or be regarded as a representation relating to products. All use of Dialog Semiconductor products, software and applications referred to in this document are subject to Dialog Semiconductor's Standard Terms and Conditions of Sale, available on the company website (www.dialog-semiconductor.com) unless otherwise stated.

Dialog and the Dialog logo are trademarks of Dialog Semiconductor plc or its subsidiaries. All other product or service names are the property of their respective owners. © Dialog Semiconductor 2020. All rights reserved.