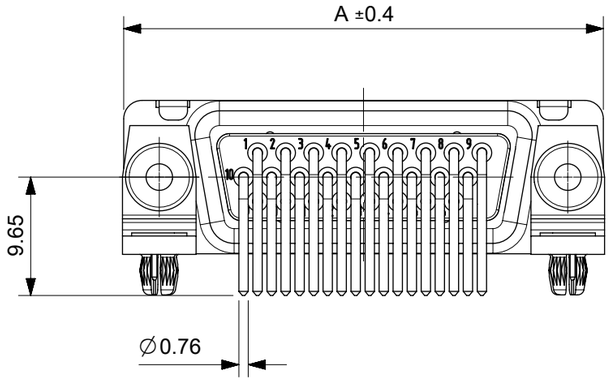

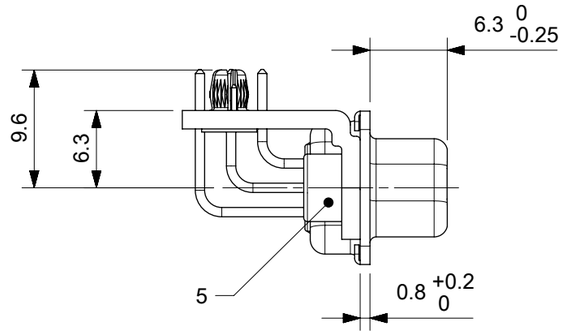

RoHS COMPLIANT BY EXEMPTION

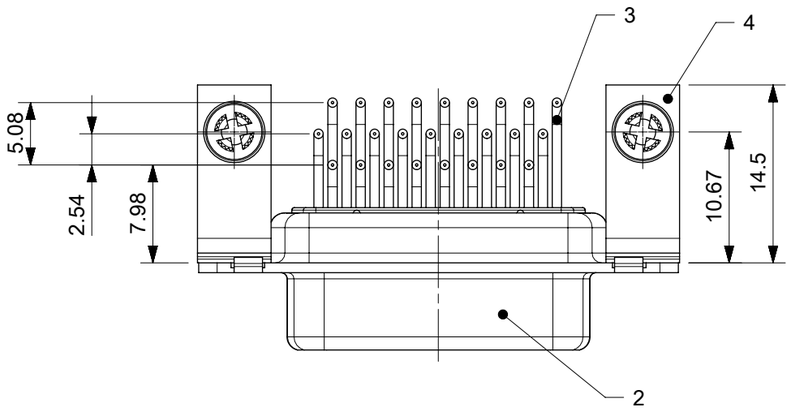

TABLE FOR PART NUMBERS

MOLEX PART#	FCT PART#	X-X	A[mm]	B[mm]	C[mm]	E*[mm]	F*[mm]	NO. OF CONTACTS 1./2./3. ROW	FORMERLY PART NO
1731130157	F15-26S135G0-5979	15-26	39.1	24.7	33.3	∅1	∅3	9/9/8	CT15-26S135-5805
1731130158	F25-44S135G0-5979	25-44	53	38.5	47.04			15/15/14	CT25-44S135-5805

*PCB HOLE PATTERNS,∅E, ∅F,ON SUPPLEMENT 1731131003

TABLE FOR GENERAL TOLERANCES

PERMISSIBLE DEVIATIONS FOR BASIC SIZE RANGE				
0.5 UPTO 3	OVER 3 UPTO 6	OVER 6 UPTO 30	OVER 30 UPTO 120	OVER 120 UPTO 400
±0.1	±0.1	±0.2	±0.3	±0.5

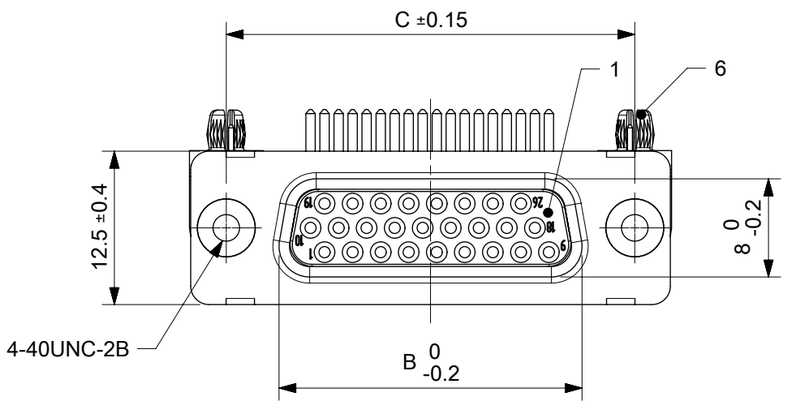

X-X NO. OF CONTACTS 09-15, 15-26, 25-44

6	2	SNAP-IN RIVET	PCB 1.6mm / BRASS	TIN PLATED
5	2	CLINCH NUT	4-40 / STEEL	TIN PLATED
4	2	BRACKET	F1080-29 / STEEL	TIN PLATED
3	X-X	SIGNAL CONTACT, MACHINED	HS135 / BRASS	0.8µm Au
2	1	SHELL	STEEL	TIN PLATED
1	1	INSULATOR	THERMOPLASTIC, GF	BLACK
NO.	St.	PART	TYPE DESCRIPTION/MATERIAL	SURFACE PLATING/COLOUR/CLASS

THIS DRAWING CONTAINS INFORMATION THAT IS PROPRIETARY TO MOLEX ELECTRONIC TECHNOLOGIES, LLC AND SHOULD NOT BE USED WITHOUT WRITTEN PERMISSION

DIMENSION UNITS	SCALE
mm	2:1

GENERAL TOLERANCES (UNLESS SPECIFIED)

ANGULAR TOL	± °
4 PLACES	±
3 PLACES	±
2 PLACES	±
1 PLACE	±
0 PLACES	±

DRAFT WHERE APPLICABLE MUST REMAIN WITHIN DIMENSIONS

CURRENT REV DESC: OBSOLETED PART NUMBER AS PER PCN#509457.

EC NO: 680890
DRWN: SANTHN 2021/06/01
CHK'D: GGA 2021/11/25
APPR: GGA 2021/11/25

INITIAL REVISION:
DRWN: RLALSANGI 2017/04/14
APPR: ISHWARG 2017/06/07

molex

HPD HIGH DENSITY D-SUB, RIGHT ANGLE PCB CONNECTOR, WITH MACHINED FEMALE SOCKET CONTACTS

PRODUCT CUSTOMER DRAWING

DOCUMENT NUMBER	DOC TYPE	DOC PART	REVISION
1731130156	PSD	000	A2

THIRD ANGLE PROJECTION	DRAWING	SERIES	MATERIAL NUMBER	CUSTOMER	SHEET NUMBER
	A3-SIZE	173113	SEE TABLE	GENERAL MARKET	1 OF 1

DOCUMENT STATUS	P1	RELEASE DATE	2021/11/25 12:19:23

FORMAT: master-tb-prod-A3
REVISION: J
DATE: 2020/01/14

PCB 09-15

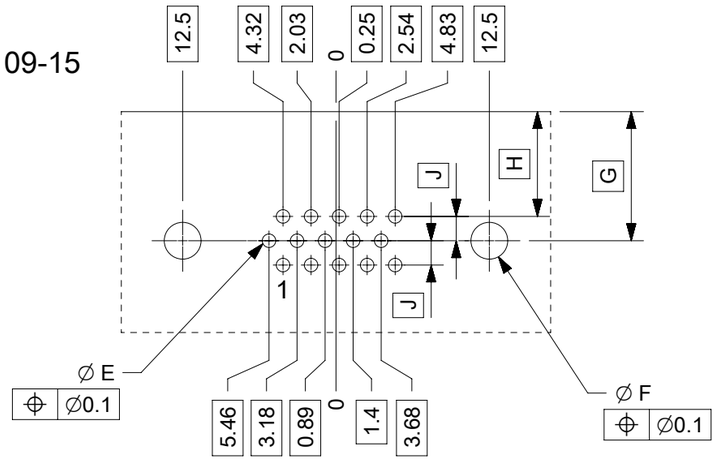

PCB 15-26

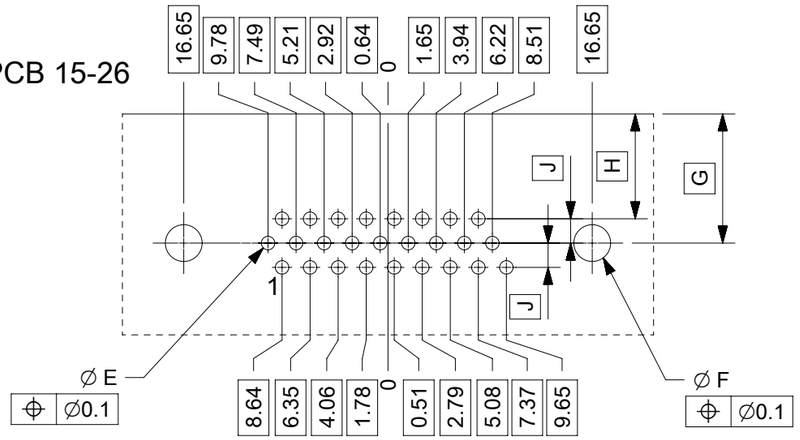

PCB 25-44

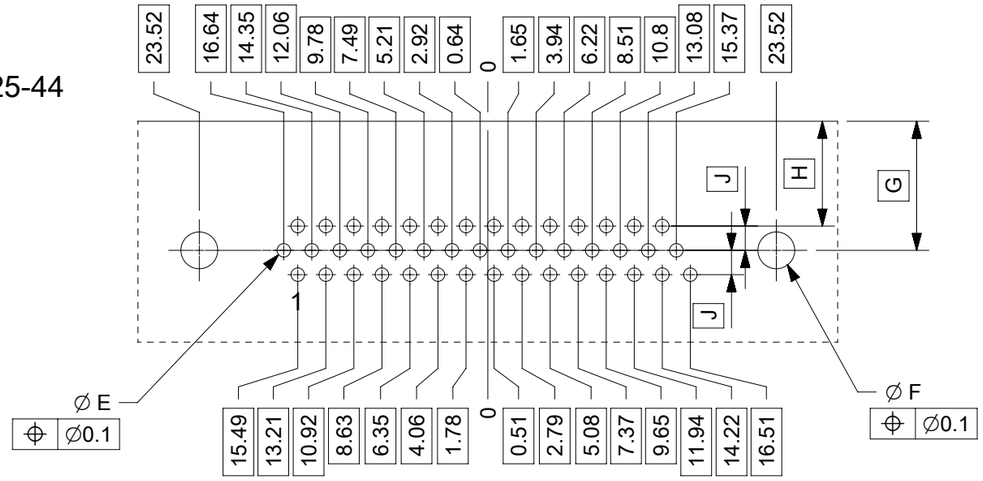

VIEW ON MOUNTING SIDE
∅E, ∅F, G, H, J SEE DATA SHEET INCL. CONNECTOR
∅F, G CONNECTORS WITH ACCESSORIES ONLY

THIS DRAWING CONTAINS INFORMATION THAT IS PROPRIETARY TO MOLEX ELECTRONIC TECHNOLOGIES, LLC AND SHOULD NOT BE USED WITHOUT WRITTEN PERMISSION

EC NO: 117803	DRWN: RLALSANGI 2017/05/12	CHK'D: ISHWARG 2017/06/07	APPR: ISHWARG 2017/06/07
REV: A	GENERAL TOLERANCES (UNLESS SPECIFIED)	ANGULAR TOL ± °	4 PLACES ± / 3 PLACES ± / 2 PLACES ± / 1 PLACE ± / 0 PLACES ±
DRAFT WHERE APPLICABLE MUST REMAIN WITHIN DIMENSIONS	DIMENSION UNITS: MM	SCALE: 2:1	DRWN BY: RLALSANGI DATE: 2017/05/12
CHK'D BY: ISHWARG DATE: 2017/06/07	APPR BY: ISHWARG DATE: 2017/06/07	DRAWING SIZE: A3	THIRD ANGLE PROJECTION

molex®

PCB HOLE PATTERN
SOCKET HIGH-DENSITY CONNECTOR RIGHT ANGLED

PRODUCT CUSTOMER DRAWING

SERIES	MATERIAL NUMBER	CUSTOMER
173113	NOT APPLICABLE	GENERAL MARKET

DOCUMENT NUMBER	DOC TYPE	DOC PART	SHEET NUMBER
1731131003	PSD	000	1 OF 1

RELEASE STATUS	P1	RELEASE DATE	07.06.2017 15:18:18

FORMAT: master-tb-prod-A3
REVISION: G
DATE: 2017/02/06