Materials
1. C3604 brass, nickel plated
2. C2680 brass, nickel plated
3. C3604 brass, nickel plated
4. POM, white

Electrical requirements
Dielectric strength: 1 min @ 500 Vac and 2mA
Insulation resistance: 100 MΩ @ 500 Vdc
Contact resistance: 50 mΩ or less

Mechanical requirements
Durability: 5000 mating cycles while maintaining normal operation and < 50mΩ
Bending strength: ≥ 3.2 kg
Breaking strength: ≥ 6.8 kg

Environmental tests
Salt spray test: 5% NaCl spray at 1ml/80cm²/h, chamber temp 46.5°C, spray temp 35°C, 87% humidity, 48 hours. No oxidation.

Cold resistance: -25°C±3 for 2 hours with no degradation.
Heat resistance: 85°C±3 for 2 hours with no degradation.

Operating range
-30 to 85 °C

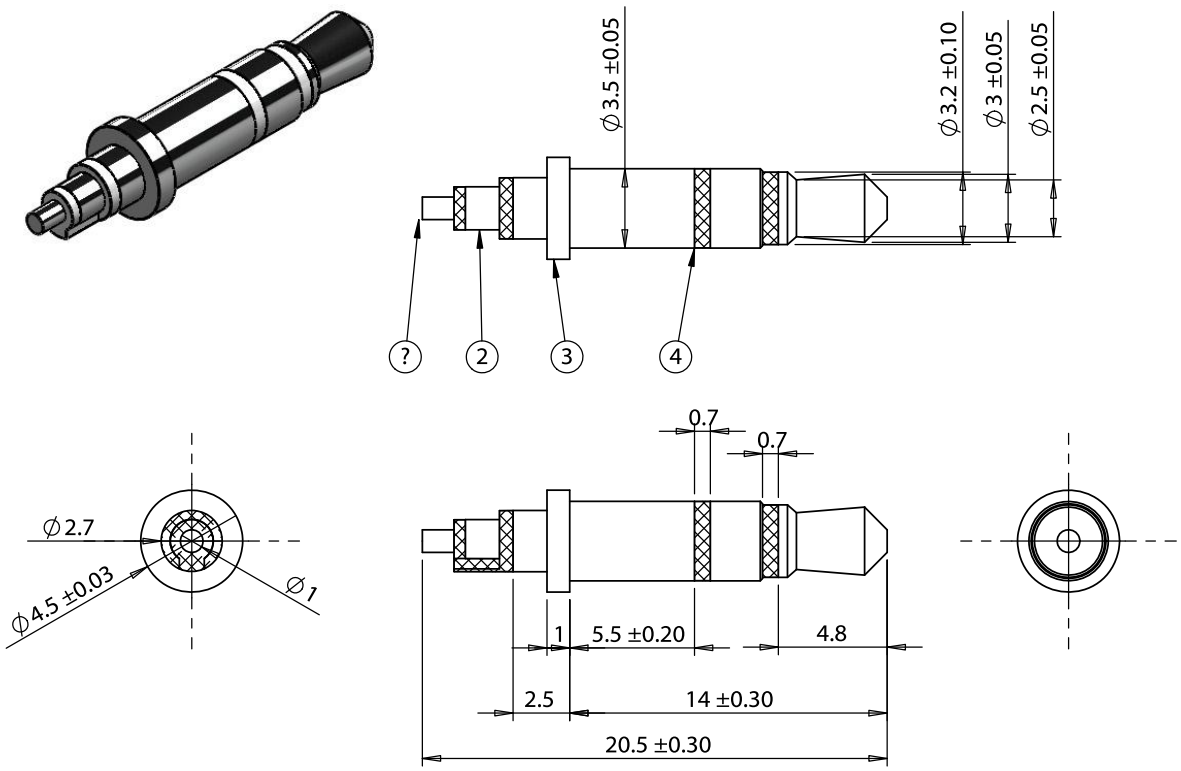

REVISION	DATE	DESCRIPTION
A	3/10/14	Initial release

PREPARED:
JM
2014.03.10 10:07:12 -07'00'

VERIFIED:
LA
Digitally signed by LA
DN: cn=LA, o=Tensility, ou, email=QA0001@tensility.com, c=US
Date: 2014.03.10 11:48:19 -07'00'

DIMENSIONS ARE IN MILLIMETERS

TOLERANCES:
X: ± 0.5 mm
X.X: ± 0.3 mm
X.XX: ± 0.05 mm

NOTES
RoHS compliant

Function test: no open, no short circuit, no INT

DESCRIPTION:
Connector, stereo plug, 3.5xL20.5 mm, brass, nickel plated, white, molding style

TENSILITY
20802 Sockeye Place #130
Bend, OR 97701 USA
tel **541.323.3228** *fax* **541.323.4202**
800 **877.670.7118** **www.tensility.com**

SIZE	PART NUMBER
A	**50-00402**

SCALE: 3:1	WEIGHT:	SHEET 1 OF 1

5 4 3 2 1