Low Current SMD LED PLCC-2

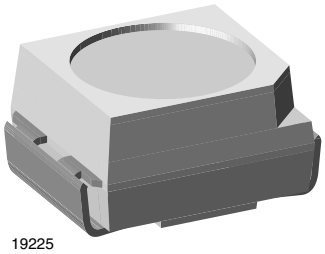

19225

DESCRIPTION

This device has been designed to meet the increasing demand for AlInGaP technology.

The package of the VLMYG30H2K1 is the PLCC-2.

It consists of a lead frame which is embedded in a white thermoplast. The reflector inside this package is filled up with clear epoxy.

PRODUCT GROUP AND PACKAGE DATA

- Product group: LED
- Package: SMD PLCC-2
- Product series: low current LED
- Angle of half intensity: ± 60°

FEATURES

- SMD LED with exceptional brightness
- Luminous intensity and wavelength categorized
- Compatible with automatic placement equipment
- EIA and ICE standard package
- Compatible with IR reflow, vapor phase and wave solder processes according to CECC 00802 and J-STD-020
- Available in 8 mm tape
- Low profile package
- Non-diffused lens: excellent for coupling to light pipes and backlighting
- Low power consumption
- Luminous intensity ratio in one packaging unit $I_{Vmax.}/I_{Vmin.} \leq 1.6$
- Preconditioning according to JEDEC® level 2a
- ESD-withstand voltage: > 2 kV acc.to MIL STD 883 D, method 3015.7
- AEC-Q101 qualified
- Material categorization: for definitions of compliance please see www.vishay.com/doc?99912

APPLICATIONS

- Automotive: backlighting in dashboards and switches
- Telecommunication: indicator and backlighting in telephone and fax
- Indicator and backlight for audio and video equipment
- Indicator and backlight in office equipment
- Flat backlight for LCDs, switches, and symbols
- General use

PARTS TABLE

PART	COLOR	LUMINOUS INTENSITY (mcd)			at I_F (mA)	WAVELENGTH (nm)			at I_F (mA)	FORWARD VOLTAGE (V)			at I_F (mA)	TECHNOLOGY
		MIN.	TYP.	MAX.		MIN.	TYP.	MAX.		MIN.	TYP.	MAX.		
VLMYG30H2K1-GS08	Yellow green	3.55	4.2	9.00	2	566	574	575	2	-	1.9	2.2	2	AlInGaP / GaAS
VLMYG30H2K1-GS18 (1)	Yellow green	3.55	4.2	9.00	2	566	574	575	2	-	1.9	2.2	2	AlInGaP / GaAS

Note

(1) Not for new designs

For technical questions, contact: LED@vishay.com

THIS DOCUMENT IS SUBJECT TO CHANGE WITHOUT NOTICE. THE PRODUCTS DESCRIBED HEREIN AND THIS DOCUMENT ARE SUBJECT TO SPECIFIC DISCLAIMERS, SET FORTH AT www.vishay.com/doc?91000

ABSOLUTE MAXIMUM RATINGS (T_{amb} = 25 °C, unless otherwise specified)
VLMYG30H2K1

PARAMETER	TEST CONDITION	SYMBOL	VALUE	UNIT
Reverse voltage (1)		V_R	5	V
DC forward current		I_F	20	mA
Surge forward current	$t_p \leq 10$ µs	I_{FSM}	0.2	A
Power dissipation		P_V	60	mW
Junction temperature		T_j	125	°C
Operating temperature range		T_{amb}	-40 to +100	°C
Storage temperature range		T_{stg}	-40 to +100	°C
Thermal resistance junction-to-ambient	Mounted on PC board (pad size > 16 mm²)	R_{thJA}	400	K/W

Note

(1) Driving the LED in reverse direction is suitable for short term application

OPTICAL AND ELECTRICAL CHARACTERISTICS (T_{amb} = 25 °C, unless otherwise specified)
VLMYG30H2K1, YELLOW GREEN

PARAMETER	TEST CONDITION	SYMBOL	MIN.	TYP.	MAX.	UNIT
Luminous intensity (1)	I_F = 2 mA	I_V	3.55	4.2	9.00	mcd
Dominant wavelength	I_F = 2 mA	λ_d	566	574	575	nm
Peak wavelength	I_F = 2 mA	λ_p	-	576	-	nm
Angle of half intensity	I_F = 2 mA	φ	-	± 60	-	°
Forward voltage	I_F = 2 mA	V_F	-	1.9	2.2	V
Reverse voltage	I_R = 10 µA	V_R	5	-	-	V
Temperature coefficient of V_F	I_F = 20 mA	TC_V	-	-4	-	mV/K
Temperature coefficient of I_V	I_F = 20 mA	TC_I	-	-0.2	-	%/K

Note

(1) In one package unit $I_{Vmax.}/I_{Vmin.} \leq 1.6$

LUMINOUS INTENSITY CLASSIFICATION

GROUP	LUMINOUS INTENSITY (mcd)		
STANDARD	OPTIONAL	MAX.	MAX.
H	2	3.55	4.5
J	1	4.5	5.6
	2	5.6	7.1
K	1	7.1	9

Note

- Luminous intensity is tested at a current pulse duration of 25 ms and an accuracy of ± 11 %.
  The above type numbers represent the order groups which include only a few brightness groups. Only one group will be shipped on each reel (there will be no mixing of two groups on each reel).In order to ensure availability, single brightness groups will not be orderable.
  In a similar manner for colors where wavelength groups are measured and binned, single wavelength groups will be shipped in any one reel.
  In order to ensure availability, single wavelength groups will not be orderable

COLOR CLASSIFICATION

GROUP	YELLOW GREEN	
	DOMINANT WAVELENGTH (nm)	
	MIN.	MAX.
5	566	569
6	568	571
7	570	573
8	572	575

Note

- Wavelengths are tested at a current pulse duration of 25 ms

For technical questions, contact: LED@vishay.com

THIS DOCUMENT IS SUBJECT TO CHANGE WITHOUT NOTICE. THE PRODUCTS DESCRIBED HEREIN AND THIS DOCUMENT ARE SUBJECT TO SPECIFIC DISCLAIMERS, SET FORTH AT www.vishay.com/doc?91000

TYPICAL CHARACTERISTICS (T_{amb} = 25 °C, unless otherwise specified)

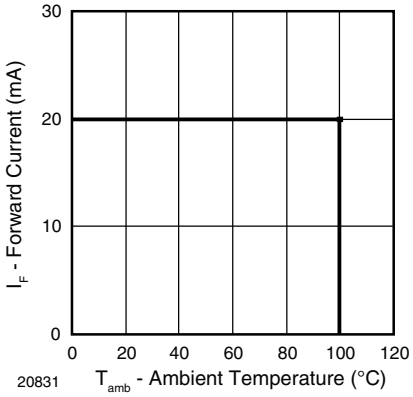

Fig. 1 - Forward Current vs. Ambient Temperature

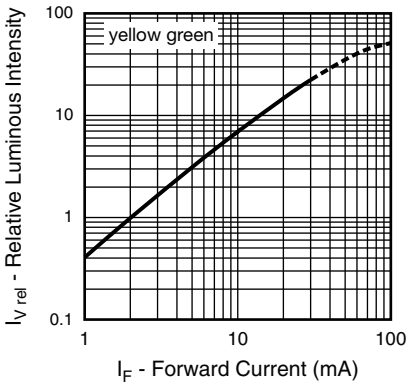

Fig. 4 - Relative Luminous Intensity vs. Forward Current

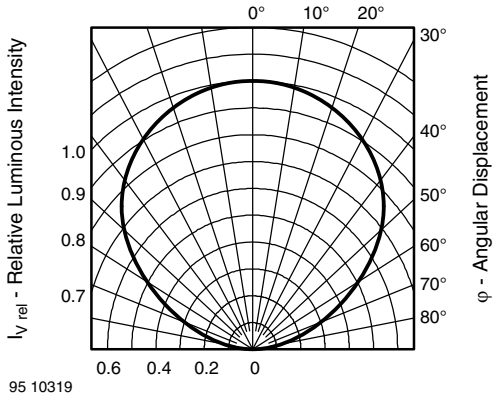

Fig. 2 - Relative Luminous Intensity vs. Angular Displacement

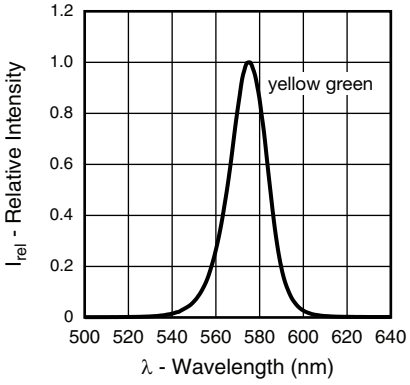

Fig. 5 - Relative Intensity vs. Wavelength

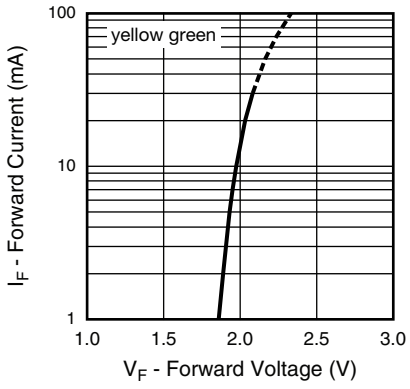

Fig. 3 - Forward Current vs. Forward Voltage

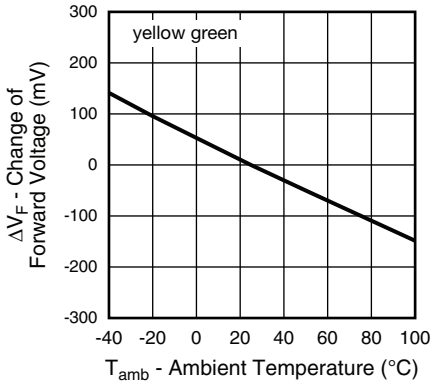

Fig. 6 - Chance of Forward Voltage vs. Ambient Temperature

For technical questions, contact: LED@vishay.com
THIS DOCUMENT IS SUBJECT TO CHANGE WITHOUT NOTICE. THE PRODUCTS DESCRIBED HEREIN AND THIS DOCUMENT ARE SUBJECT TO SPECIFIC DISCLAIMERS, SET FORTH AT www.vishay.com/doc?91000

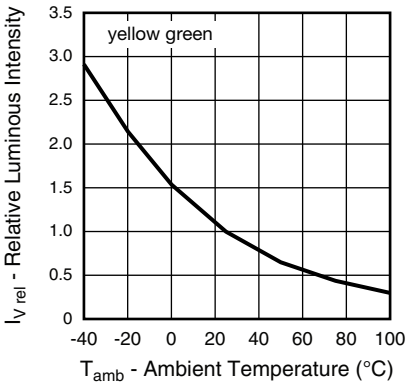

Fig. 7 - Relative Luminous Intensity vs. Ambient Temperature

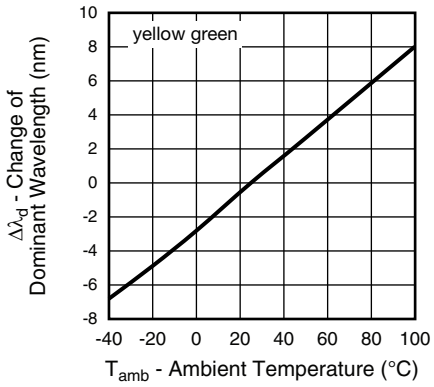

Fig. 8 - Change of Dominant Wavelength vs. Ambient Temperature

PACKAGE DIMENSIONS in millimeters

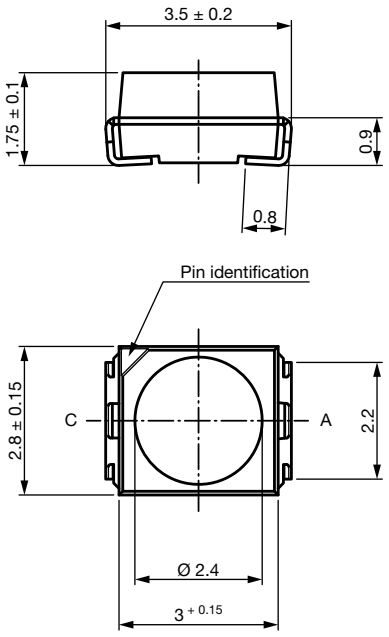

technical drawings
according to DIN
specifications

Drawing-No.: 6.541-5067.01-4
Issue: 7; 12.03.14

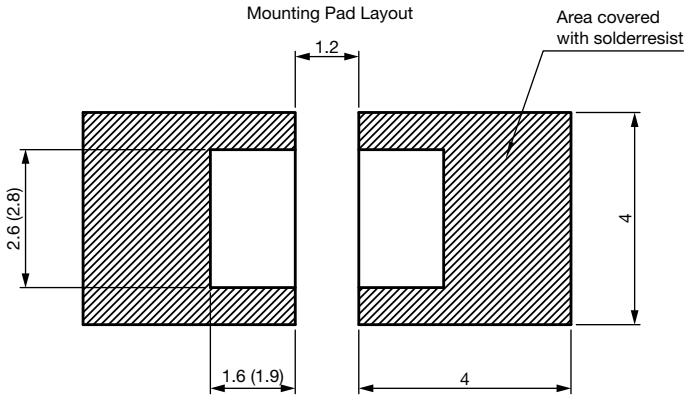

Dimensions: reflow and vapor phase (wave soldering)

For technical questions, contact: LED@vishay.com
THIS DOCUMENT IS SUBJECT TO CHANGE WITHOUT NOTICE. THE PRODUCTS DESCRIBED HEREIN AND THIS DOCUMENT ARE SUBJECT TO SPECIFIC DISCLAIMERS, SET FORTH AT www.vishay.com/doc?91000

METHOD OF TAPING / POLARITY AND TAPE AND REEL

SMD LED (VLM.3-SERIES)

Vishay's LEDs in SMD packages are available in an antistatic 8 mm blister tape (in accordance with DIN IEC 40 (CO) 564) for automatic component insertion. The blister tape is a plastic strip with impressed component cavities, covered by a top tape.

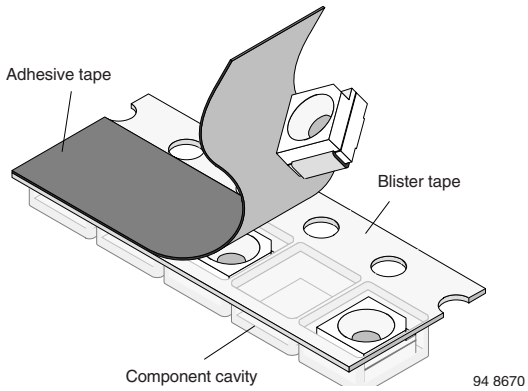

TAPING OF VLM.3..

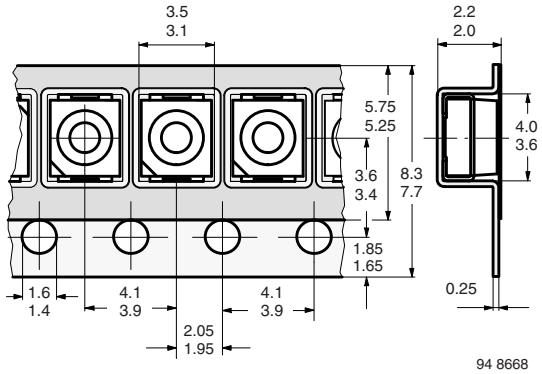

Fig. 9 - Tape Dimensions in mm for PLCC-2

REEL PACKAGE DIMENSION IN MILLIMETERS FOR SMD LEDS, TAPE OPTION GS08 (= 1500 PCS.)

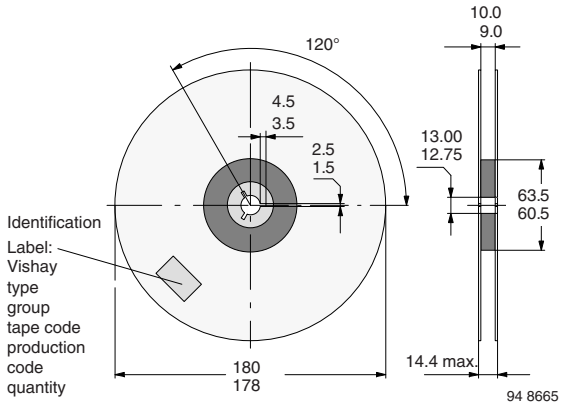

Fig. 10 - Reel Dimensions - GS08

REEL PACKAGE DIMENSION IN MILLIMETERS FOR SMD LEDS, TAPE OPTION GS18 (= 8000 PCS.) PREFERRED

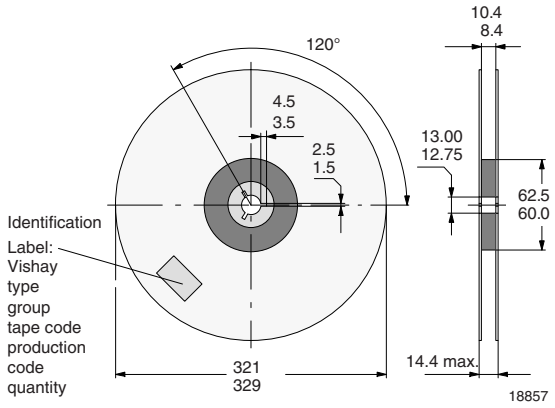

Fig. 11 - Reel Dimensions - GS18

SOLDERING PROFILE

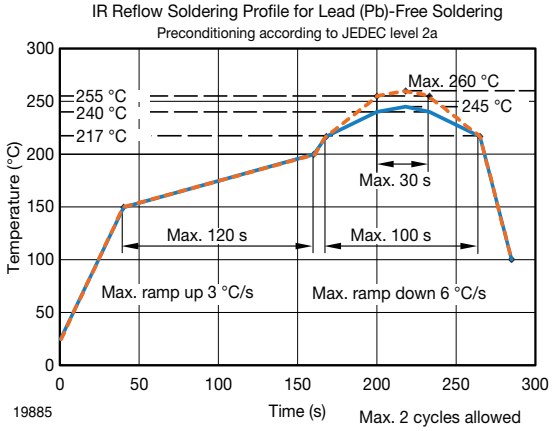

Fig. 12 - Vishay Lead (Pb)-free Reflow Soldering Profile (according to J-STD-020B)

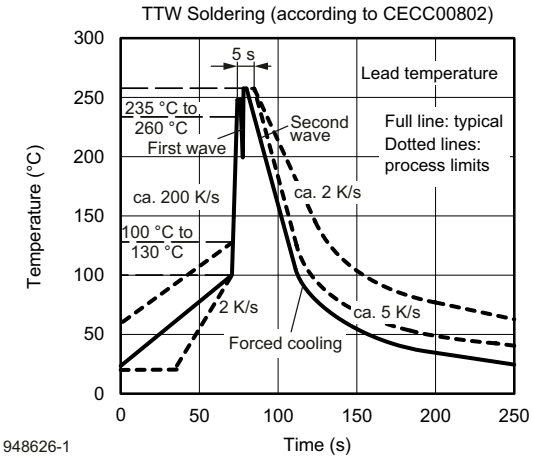

Fig. 13 - Double Wave Soldering of Opto Devices (all Packages)

For technical questions, contact: LED@vishay.com
THIS DOCUMENT IS SUBJECT TO CHANGE WITHOUT NOTICE. THE PRODUCTS DESCRIBED HEREIN AND THIS DOCUMENT ARE SUBJECT TO SPECIFIC DISCLAIMERS, SET FORTH AT www.vishay.com/doc?91000

BAR CODE PRODUCT LABEL (example)

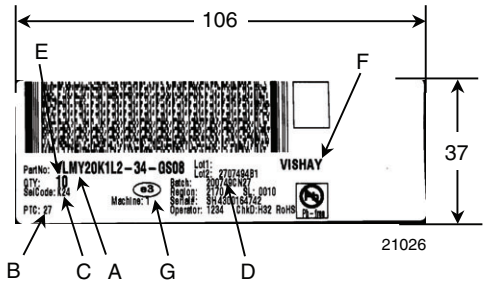

A. Type of component

B. PTC = manufacturing plant

C. SEL - selection code (bin)
e.g.: L2 = code for luminous intensity group
0 = code for color group

D. Date code year / week

E. Day code (e.g. 1: Monday)

F. Batch no.

G. Total quantity

H. Company code

DRY PACKING

The reel is packed in an anti-humidity bag to protect the devices from absorbing moisture during transportation and storage.

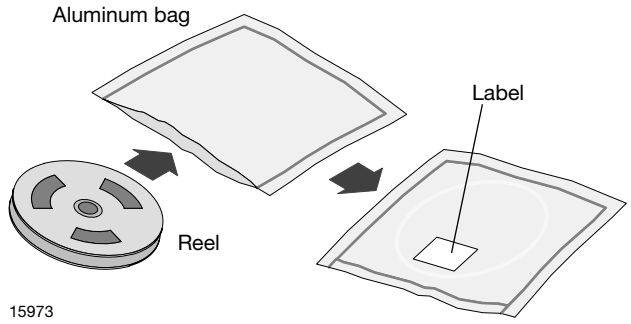

FINAL PACKING

The sealed reel is packed into a cardboard box. A secondary cardboard box is used for shipping purposes.

RECOMMENDED METHOD OF STORAGE

Dry box storage is recommended as soon as the aluminum bag has been opened to prevent moisture absorption. The following conditions should be observed, if dry boxes are not available:

- Storage temperature 10 °C to 30 °C
- Storage humidity ≤ 60 % RH max.

After more than 672 h under these conditions moisture content will be too high for reflow soldering.

In case of moisture absorption, the devices will recover to the former condition by drying under the following condition:

192 h at 40 °C + 5 °C / - 0 °C and < 5 % RH (dry air / nitrogen) or
96 h at 60 °C + 5 °C and < 5 % RH for all device containers or
24 h at 100 °C + 5 °C not suitable for reel or tubes.

An EIA JEDEC standard JESD22-A112 level 2a label is included on all dry bags.

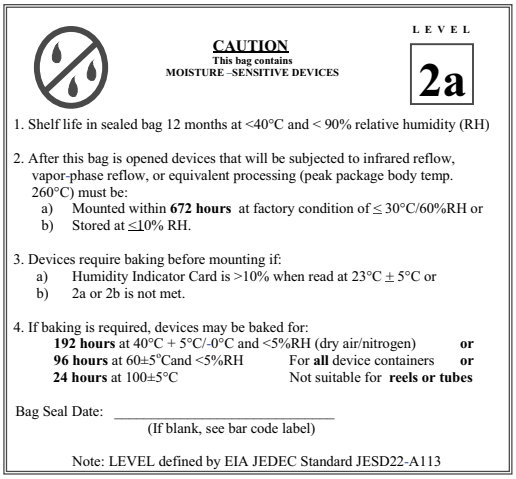

Example of JESD22-A112 level 2a label

ESD PRECAUTION

Proper storage and handling procedures should be followed to prevent ESD damage to the devices especially when they are removed from the antistatic shielding bag. Electrostatic sensitive devices warning labels are on the packaging.

VISHAY SEMICONDUCTORS STANDARD BAR CODE LABEL

The Vishay Semiconductors standard bar code labels are printed at final packing areas. The labels are on each packing unit and contain Vishay Semiconductors specific data.

For technical questions, contact: LED@vishay.com

THIS DOCUMENT IS SUBJECT TO CHANGE WITHOUT NOTICE. THE PRODUCTS DESCRIBED HEREIN AND THIS DOCUMENT ARE SUBJECT TO SPECIFIC DISCLAIMERS, SET FORTH AT www.vishay.com/doc?91000

Disclaimer

ALL PRODUCT, PRODUCT SPECIFICATIONS AND DATA ARE SUBJECT TO CHANGE WITHOUT NOTICE TO IMPROVE RELIABILITY, FUNCTION OR DESIGN OR OTHERWISE.

Vishay Intertechnology, Inc., its affiliates, agents, and employees, and all persons acting on its or their behalf (collectively, “Vishay”), disclaim any and all liability for any errors, inaccuracies or incompleteness contained in any datasheet or in any other disclosure relating to any product.

Vishay makes no warranty, representation or guarantee regarding the suitability of the products for any particular purpose or the continuing production of any product. To the maximum extent permitted by applicable law, Vishay disclaims (i) any and all liability arising out of the application or use of any product, (ii) any and all liability, including without limitation special, consequential or incidental damages, and (iii) any and all implied warranties, including warranties of fitness for particular purpose, non-infringement and merchantability.

Statements regarding the suitability of products for certain types of applications are based on Vishay's knowledge of typical requirements that are often placed on Vishay products in generic applications. Such statements are not binding statements about the suitability of products for a particular application. It is the customer's responsibility to validate that a particular product with the properties described in the product specification is suitable for use in a particular application. Parameters provided in datasheets and / or specifications may vary in different applications and performance may vary over time. All operating parameters, including typical parameters, must be validated for each customer application by the customer's technical experts. Product specifications do not expand or otherwise modify Vishay's terms and conditions of purchase, including but not limited to the warranty expressed therein.

Hyperlinks included in this datasheet may direct users to third-party websites. These links are provided as a convenience and for informational purposes only. Inclusion of these hyperlinks does not constitute an endorsement or an approval by Vishay of any of the products, services or opinions of the corporation, organization or individual associated with the third-party website. Vishay disclaims any and all liability and bears no responsibility for the accuracy, legality or content of the third-party website or for that of subsequent links.

Except as expressly indicated in writing, Vishay products are not designed for use in medical, life-saving, or life-sustaining applications or for any other application in which the failure of the Vishay product could result in personal injury or death. Customers using or selling Vishay products not expressly indicated for use in such applications do so at their own risk. Please contact authorized Vishay personnel to obtain written terms and conditions regarding products designed for such applications.

No license, express or implied, by estoppel or otherwise, to any intellectual property rights is granted by this document or by any conduct of Vishay. Product names and markings noted herein may be trademarks of their respective owners.

© 2022 VISHAY INTERTECHNOLOGY, INC. ALL RIGHTS RESERVED