Marktech Optoelectronics

SWIR Infrared Emitter

Product No: **MTSM4110MT2-BK**

Peak Emission Wavelength: 1040nm

The MTSM4110MT2-BK consists of a 1040nm high output infrared die in a PLCC-2 black plastic molded surface mount package. Custom package solutions and sorting are available.

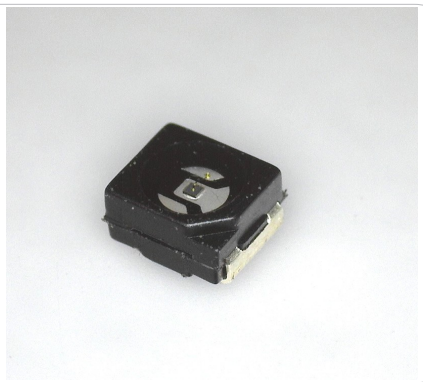

FEATURES

> High Output Power
> Wide Beam Angle
> High Reliability

APPLICATIONS

> Optical Switches & Sensors
> Fiber Optical Communication
> Bar-code Reader

Absolute Maximum Ratings (Ta=25°C)

ITEMS	SYMBOL	RATINGS	UNIT
Forward Current (DC)	IF	100	mA
Forward Current (Pulse)*1	IFP	1	A
Reverse Voltage	VR	5	V
Power Dissipation	PD	--	mW
Operating Temperature Range	Topr	-20 ~ +80	°C
Storage Temperature Range	Tstg	-30 ~ +100	°C
Junction Temperature	Tj	100	°C
Lead Soldering Temperature	Tls	260	°C

*1: Tw=10μsec, T=10msec.

Electrical & Optical Characteristics (Ta = 25°C)

ITEMS	SYMBOL	CONDITIONS	MIN	TYP	MAX	UNIT
Power Output	PO	IF=20mA	--	3.6	--	mW
Power Output	PO	IF=50mA	--	9.0	--	mW
Forward Voltage	VF	IF=20mA	--	1.23	--	V
Forward Voltage	VF	IF=50mA	--	1.30	--	V
Reverse Current	IR	VR=5V	--	--	100	μA
Peak Emission Wavelength	λp	IF=50mA	--	1040	--	nm
Spectral Line Half Width	Δλ	IF=50mA	--	36	--	nm
Half Intensity Beam Angle	Θ	IF=50mA	--	±55	--	deg

2020-04-30

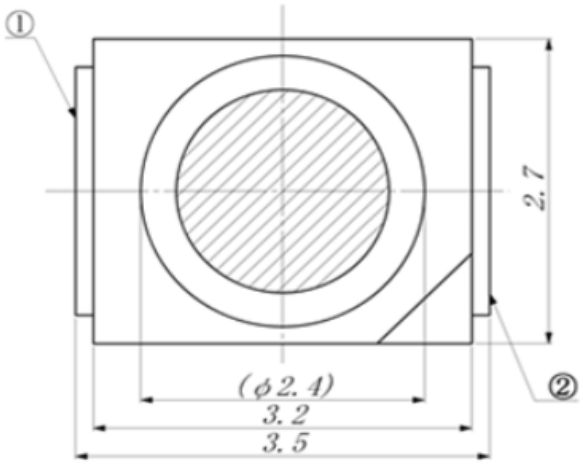

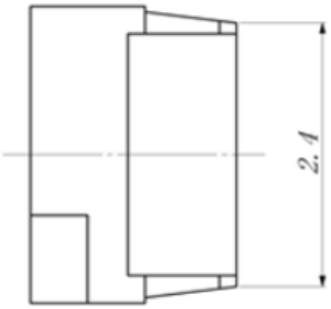

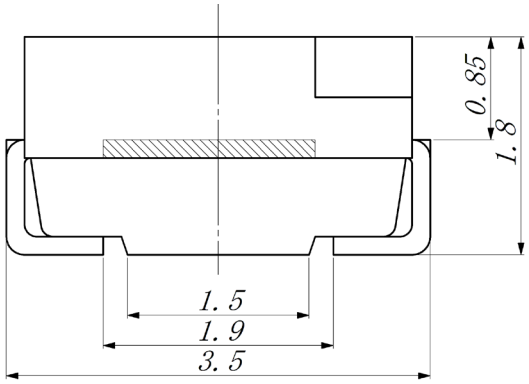

SPECTRAL OUTPUT

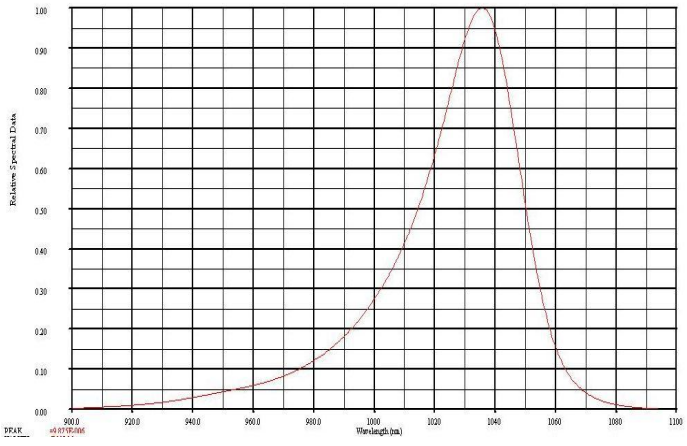

Unit: mm, Tolerance: ±0.2

2020-04-30

RELATIVE POWER vs FORWARD CURRENT

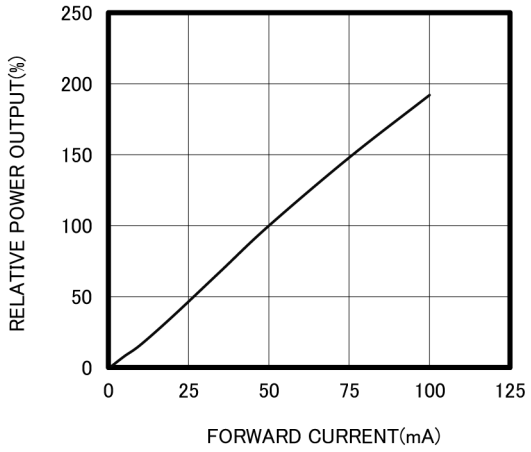

THERMAL DERATING CURVE

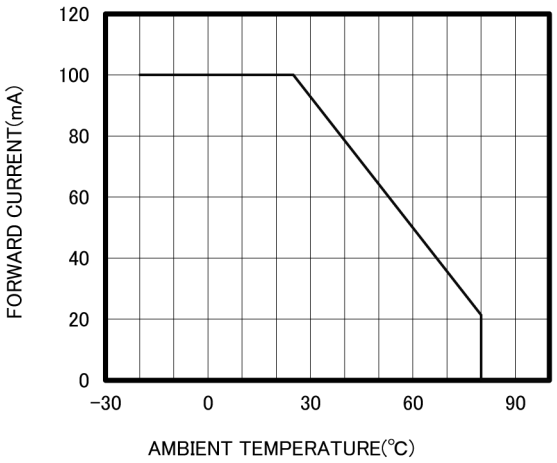

RADIATION PATTERN

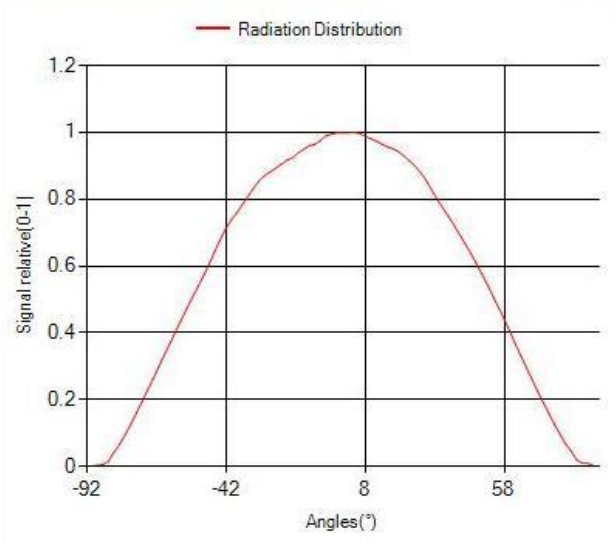

VIEW ANGLE

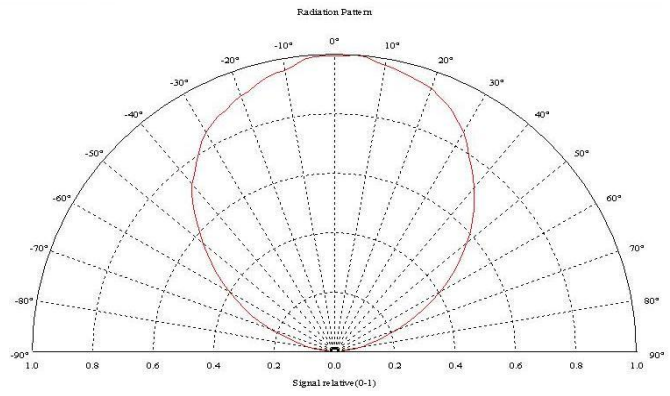

The information contained herein is subject to change without notice.

2020-04-30

FORWARD I-V CHARACTERISTICS

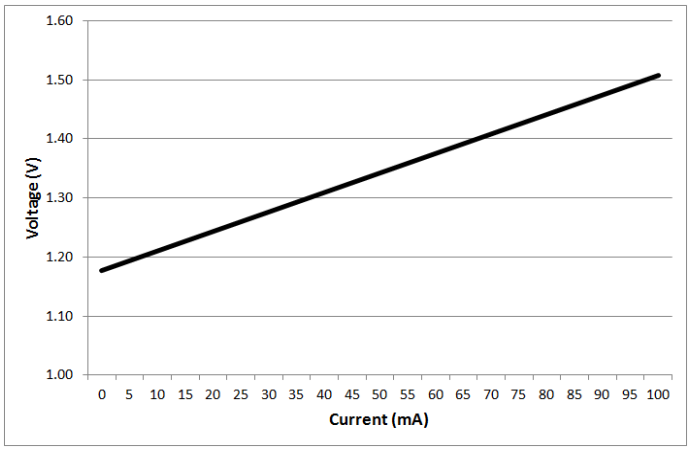

The information contained herein is subject to change without notice.

Global Headquarters, 3 Northway Lane North, Latham, NY 12110, USA **www.marktechopto.com**

TOLL FREE: 1-800-984-5337 • **PHONE:** 518-956-2980 • **FAX:** 518-785-4725 • **EMAIL:** info@marktechopto.com