Si5040-EVB

Si5040 Evaluation Board

Description

The Si5040-EVB provides a platform for evaluating Skyworks Solutions' Si5040 XFP Signal Conditioning Transceiver. The Si5040 is a complete, low-power, high-performance XFP transceiver suitable for use in all XFP module types, from short-reach datacom to long-reach telecom applications. The Si5040 is unique in that it integrates a rate-agile, programmable-bandwidth, jitter-attenuating transmit CMU and a fixed-bandwidth receive CMU. The device supports referenceless operation or operation with a synchronous or asynchronous reference clock. The device can be completely configured through a serial microcontroller interface. The Si5040 Transceiver provides full-duplex operation at serial data rates from 9.95 to 11.4 Gbps (continuous).

The Si5040-EVB also contains an MCU (C8051F320) and a crystal oscillator (Si534), both from Skyworks Solutions. The 8051F320 provides status and control communication between the Si5040 and the Si5040-EVB Software. The Si534 is a multi-rate crystal oscillator that, when enabled, supplies one of four selectable reference clocks to the Si5040 while providing that clock at SMA connectors for external monitoring/use.

The Skyworks Solutions MCU (C8051F320) has a USB port that is used to communicate to a PC that is running the Si5040 EVB software. The MCU also has a serial port that connects to the serial control port of the Si5040 to read and write to its registers. In addition, the MCU drives all but one of the LEDs on the EVB and can make a very accurate reading of the three voltages that power the EVB.

Note that starting in October of 2006, all Si5040-EVBs will be assembled with Si5040 Rev B device on the Si5040 Rev A Printed Circuit Board (PCB). Prior to October of 2006, all Si5040-EVBs were assembled with the Si5040 Rev A device on the Si5040 Rev B Printed Circuit Board (PCB).

Features

The Si5040-EVB includes the following:

- Evaluation of Skyworks Solutions' Si5040 XFP Signal Conditioning Transceiver
- Separate supply connections for the following:
  - V_{DD} (1.8 V) powers the internal circuitry of the Si5040.
  - V_{DD_3p3} (3.3 V) powers the MCU and XTAL oscillator.
  - V_{DDIO} (1.8 or 3.3 V) powers the LVTTL IOs of the Si5040.
- Four selectable on-chip reference frequencies.
- LEDs for visual monitoring of key chip and board parameters.
- Si5040 EVB software allows for quick and easy access to all registers in the Si5040.
- A dual-row header allows the Si5040 to be easily connected to another MCU for serial control and status communications.
- Synchronous output clock at 1/16 the recovered

Si5040-EVB Quick Start

Starting in October of 2006, all Si5040-EVBs will be assembled with the Rev B device. Perform the following steps to set up the Si5040-EVB.

1. Install the Si5040 EVB Driver. (This must be installed before the EVB is connected to the PC via the USB cable.)
2. Install the Si5040 EVB Software. (Assumes that Microsoft .NET Framework 1.1 is already installed.)
3. Connect the power supplies to the EVB.
4. Turn on the power supplies.
5. Connect a USB cable from the EVB to the PC where the software was installed.
6. Launch the Si5040 EVB Software by clicking on **Start →Programs→Skyworks Solutions→Si5040 Software→Si5040 Register Programmer**. The “Select the EVB” window will appear. Simply click OK (for connection with single EVB).

7. The device should now be functioning with the CMUs in referenceless mode. That is, the RX and TX CMUs clean up the recovered clock from the CDR without the aid of any external reference clock or crystal. In addition, the device will automatically detect an external reference clock for CDR acquisition. If an external reference clock is not provided, the CDR acquisition will be in reference-less mode as well.
8. If Mode 3 (the extreme jitter cleaning mode) is desired, open System Programmer and click on the TX CDR/CMU Control link in the Block Diagram. Then, choose "Mode 3" from the "cmuMode" pull-down manual.
9. Next, open System Programmer. Under System Programmer, there is a block diagram of the device, and under the "Alarms and Interrupts" tab, are all the alarms you need for the evaluation. Note that under the "Alarms and Interrupts" tab, the tpSync alarms should be labeled as "tpSyncLos". When the "tpSyncLos" LED is green, the test pattern checker is in the Synchronized state (tpSyncLos= 0 in Register 9 or 137, Bit 1). When the "tpSyncLos" LED is red, the test pattern checker is in the Loss of Synchronization state (tpSyncLos= 1 in Register 9 or 137, Bit 1).

1. Functional Description

The Si5040-EVB and software allow for a complete and simple evaluation of the functions, features, and performance of the Si5040 transceiver.

1.1. Input Power

This evaluation board requires three power inputs, +1.8 V, +3.3 V, and V_{DDIO}(1.8 V or 3.3 V), as well as a ground connection. J8 and J9 are used for connecting power to the EVB (see Figure 1).

1.2. LEDs

Three LEDs indicate that power has been properly applied to the EVB. These are +3.3 V, V_{DDIO}, and +1.8 V. Since these LEDs are driven by the MCU (not the power itself), the V_{DDIO} and +1.8 V LEDs will not function unless +3.3 V is first applied to the EVB (see Figure 1).

The 3.3 V LED will be on solid when the 3.3 V input is within the 2.97 to 3.63 V range. The 1.8 V LED will be on solid when the 1.8 V at the Si5040 V_{DD} pins is within the 1.62 to 1.89 V range.

The V_{DDIO} LED will be on solid when this input voltage is between 1.89 and 3.63 V. The V_{DDIO} LED will flash on and off when this voltage is between 1.62 and 1.89 V.

The REF ON LED indicates that the Si534 clock reference chip is powered up and applying a clock signal to the Si5040. JP16 must be set to the ON position in order to power up the Si534.

Table 1. LED Status and Description

LED	Status	Description
3.3 V	ON	When 3.3 V supply is between 2.97 and 3.63 V.
1.8 V	ON	When Si5040 V_{DD} pins are between 1.62 and 1.89 V.
VDDIO	ON	When Si5040 V_{DDIO} pin is between 1.89 and 3.63 V.
	FLASHING	When Si5040 V_{DDIO} pin is between 1.62 and 1.89 V.
REF ON	ON	When the Reference clock source Si534 is powered up.
USB	ON	Flashes when USB Access is occurring.
SPSEL	ON	When the Si5040 SPSEL pin is high.
INTRPT	ON	When the Si5040 INTRPT pin is high.
RXLOS	ON	When the Si5040 RXLOS pin is high.
RXLOL	ON	When the Si5040 RXLOL pin is high.

Since the 1.8 V LED indicates the voltage at the Si5040 V_{DD} pins, the jumper, JP12, must be in place for this LED to function and for the Si5040 to receive its core supply voltage. However, the V_{DDIO} LED will function without the jumper on JP13.

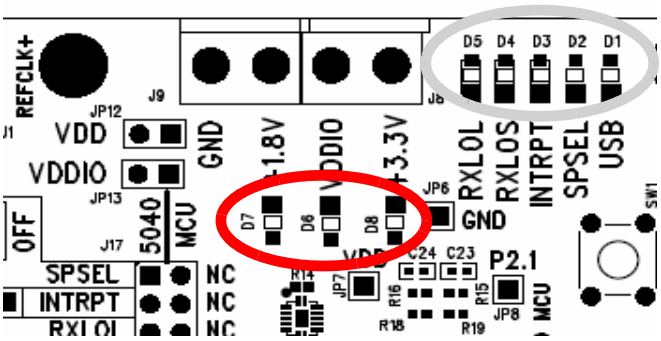

Figure 1. LED

1.3. Jumpers and Headers

For the EVB to function, there are five jumpers that must be installed.

There must be jumpers on JP12 and JP13 because they apply power to the Si5040 (see Figure 2). The next three required jumpers are three positions on J17, labeled SS, SD, and SCK on one side and SS_U, SD_U, and SCK_U on the other side (see Figure 3). Connecting jumpers between SS to SS_U, SD to SD_U, and SCK to SCK_U enables the onboard MCU to communicate with the Si5040 using the 3-wire serial interface.

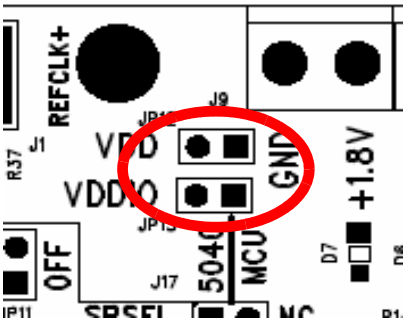

Figure 2. JP12 and JP13

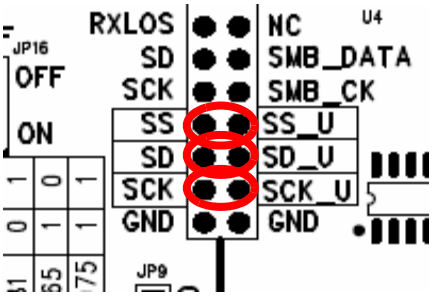

Figure 3. J17

1.3.1. MCU to Si5040 Serial Communications (Status and Control)

The microcode within the MCU is designed to communicate with the Si5040 when SPSEL pin 9 is high (JP11 no jumper). In this mode, the serial data transfer from the MCU to the Si5040 is very similar to the SPI protocol but with a single bidirectional data line rather than two unidirectional data lines. However, one could write new microcode for the MCU that uses the SMBus (I^2C compatible) to communicate with the Si5040. To enable SMBus communication between the Si5040 and the MCU, you must install a jumper on JP11 and on J17 between SD/SMB_DAT, SCK/SMB_CK and SS/SS_U. See Figure 4. Note that INTRPT on JP17 should be labeled as INTRPTB because the interrupt from the Si5040 is an active low signal.

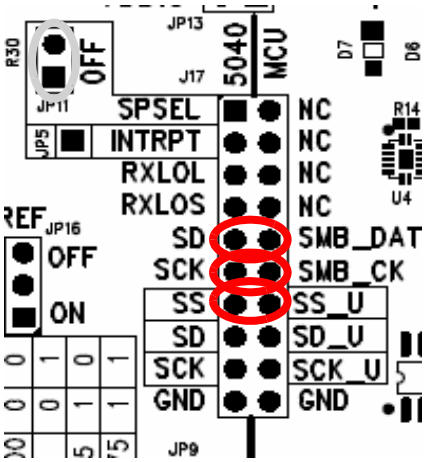

Figure 4. SMBus Protocol

1.3.2. External MCU Control

To use an external MCU, make sure that all jumpers are removed from J17 and that JP11 does not have a jumper (see Figure 5). Now, the following pins of J17 are available for connection to an external MCU.

- SCK
- SD
- SS
- RXLOS
- RXLOL
- INTRPT
- SPSEL
- GND

The Skyworks Solutions MCU that is well-suited for use within XFP Modules is the C8051F330.

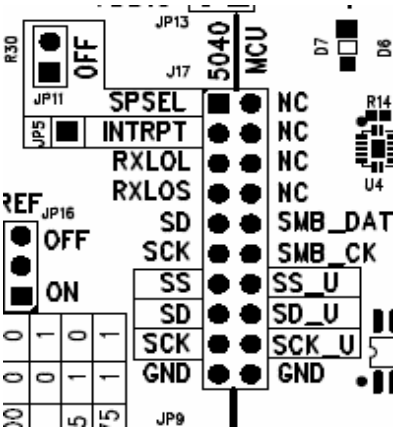

Figure 5. External MCU

1.3.3. Reference Clock

To use the on-chip reference clock (Si534), JP16 must be set to the ON position. When this is done, the REF ON LED will light, indicating that power is applied to the Si534. The output frequency of the Si534 is controlled by jumpers JP17 and JP18 (see Figure 6).

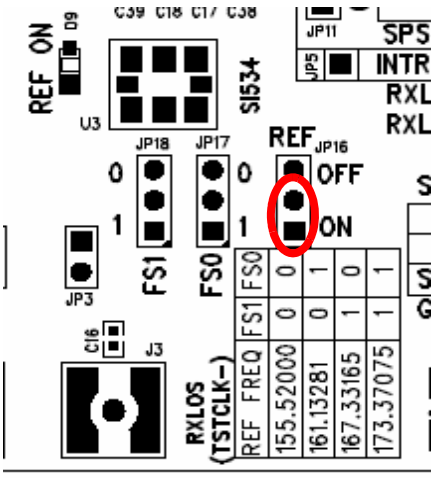

Figure 6. Reference Clock

1.3.4. Synchronous Test Clock

By setting Register 57 to 9Ch, the Tx CMU clock divided by 64 will be output at J2 and J3. The EVB must have jumpers on JP2 and JP3 to enable the /64 clock output (see Figure 7). By setting Register 57 to 1Ch, the Rx CMU clock divided by 64 will be output at J2 and J3. When jumpers are placed on JP2 and JP3, the functionality of RXLOS and RXLOL is lost, and the state of the LEDs for these two signals becomes invalid. To return the RXLOL and RXLOS signals to their normal modes, set Register 57 to 00h, and remove the jumpers on JP2 and JP3. Register 57 cannot be changed with the System Programmer GUI, you must use the Register Programmer GUI (see page 8).

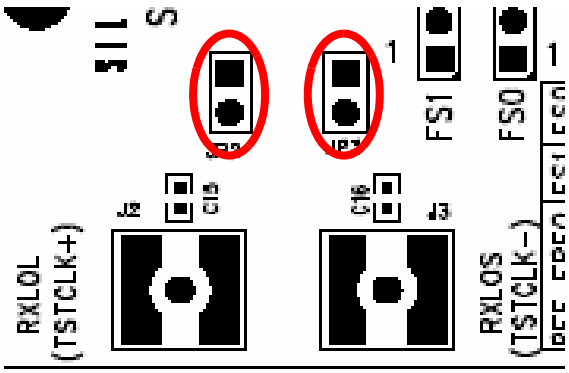

Figure 7. Synchronous Test Clock

1.4. Reference Clock Details

The Si5040 can function without a reference clock and meet all system jitter generation and jitter tolerance specifications. However, the presence of a reference clock provides the following capabilities:

- Ability to measure the frequency error of the input data and generate a Loss-of-Lock indication if the frequency error exceeds 1000 ppm with respect to the reference clock.
- Only acquire lock if the input data is within 200 ppm.
- If the reference clock is synchronous, the Si5040 can operate in the clean, synchronous CMU mode as defined in section 3.9.1 of the XFP specification.

A reference clock to the Si5040 can be input from an external source, or it can be generated from the onboard Si534. Since the clock from the Si534 is linearly summed with the external reference clock input, care must be taken to ensure that both clock sources are not active at the same time. When the Si534 is enabled (JP16 on), its output will be present at SMAs J1 and J5 for monitoring and/or system usage. When the Si534 is OFF, a differential clock applied at J1 and J5 will be attenuated by 2.7 dB before it reaches the REFCLK± inputs of the Si5040.

While an Si534 has the capability of generating any four frequencies between 10 MHz and 1400 MHz, this Si534 has been programmed to generate four specific frequencies. Jumpers JP17 and JP18 control the FS[1:0] inputs to the Si534 (see Figure 6). The four frequencies are as follows:

- 155.52000 MHz Set FS[1:0] = 00
  This is 1/64 of the SONET OC-192 rate of 9.95328e9 bps
- 161.13281 MHz Set FS[1:0] = 01
  This is 1/64 of the 10 GIGE LAN PHY rate of 10.3125e9 bps
- 167.33165 MHz Set FS[1:0] = 10
  This is 1/64 of the SONET OC-192 rate with 255/237 FEC overhead (10.709225e9 bps)
- 173.37075 MHz Set FS[1:0] = 11
  This is 1/64 of the 10 GIGE LAN Phy rate with 255/237 FEC overhead (11.095727e9 bps)

The Si534 holds the above frequencies to within ±20 ppm over temperature (–40 to +85 °C) and voltage. The XFP specification allows for an optional clean synchronous CMU mode if the reference clock has sufficiently low phase noise. See Section 3.9.1 and Table 25 of the XFP specification. For the four frequencies above, the typical phase noise of the Si534 is shown in Table 2 with the XFP requirements for reference.

Table 2. Phase Noise

Frequency Offset	Si534 Nominal Performance	XFP Clean Synch CMU Specification
1 kHz	–116 dBc/Hz	–85 dBc
10 kHz	–120 dBc/Hz	–108 dBc
100 kHz	–128 dBc/Hz	–128 dBc
1 MHz	–141 dBc/Hz	–138 dBc
10 MHz	–144 dBc/Hz	–138 dBc

1.5. Crystal Cleaning

There is a crystal, Y1, on the evaluation board that is located very close to the Si5040 for the purpose of jitter improvement on the Txdout signal. Y1 is a 114.285 Mhz third overtone crystal that is enabled by putting the transmit CMU into crystal cleaning Mode 3. Even when the Si5040 uses the crystal for transmit jitter improvement, the transmit CMU is still continuously agile across the entire operating range of 9.9 to 11.4 GHz. Of course, the transmit CMU may also operate without the Y1 crystal and still be continuously rate agile (mode 0). The layout for Y1 is specifically designed for three different size crystals, 3.5x6 mm, 3.2x5 mm, and 2.5x3.2 mm.

1.6. RD Preemphasis

Even though the output data at the Si5040 RD pins has very fast transitions, we have found that some customers prefer some signal shaping of the RD output signal at the XFI. Therefore, the Si5040 EVB that you are receiving has a pre-emphasis circuit added to the RD± outputs. This circuit is composed of a few resistors and capacitors, all of which can be generic, low-cost units. Because it is a passive circuit, it slightly

attenuates the RD signal, which requires that the RD signal level from the Si5040 be slightly increased. Please use the Si5040 Register 56 to increase the RD drive signal from its default value of 600 mV to either 700 or 800 mV. See the Si5040 datasheet for more information. The circuit that is implemented on the EVB is shown below:

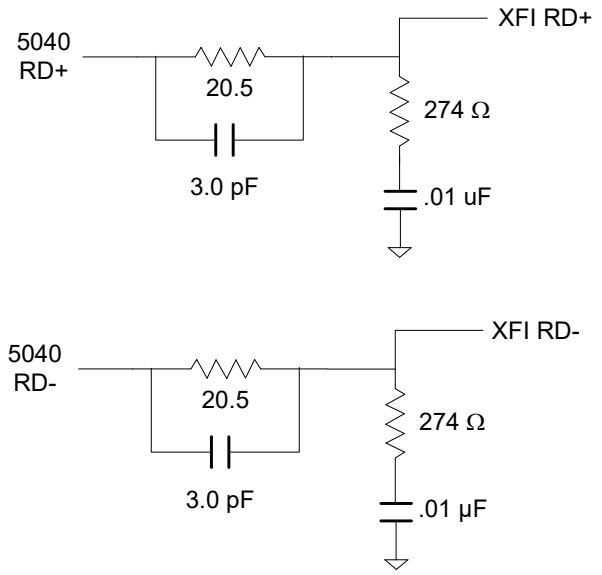

Figure 8. EVB Pre-Emphasis Circuit

Within an XFP module, the pre-emphasis circuit should be located as close to the Si5040 RD± pins as is practical. In an XFP module, the pre-emphasis circuit above can be modified to remove one component yet still behave the same electrically. The following circuit shows this simplification.

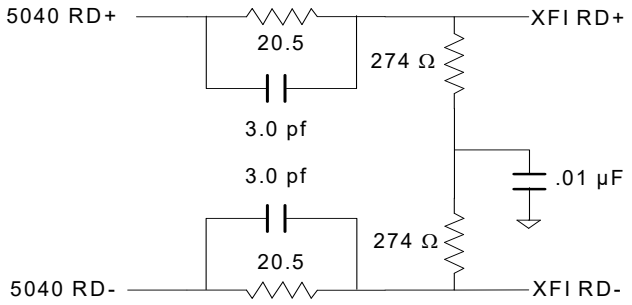

Figure 9. Recommended XFP Pre-Emphasis Circuit

Should you not like the eye pattern at the RD± pins, this circuit can be easily optimized for your application. If you wish assistance in this matter, please contact Siicon Laboratories.

1.7. Start Up Script(s)

1.7.1. For Evaluation Boards Populated with the Rev. A Device

It is necessary to load the scripts included with the evaluation board software at startup and after any reset of the Si5040 Rev A. The default name for the initialization script is "Si5040InitialRegisterMapSettings.txt". This script will set up the Rev A device in Mode 0, the Reference-less operation mode.

If you need to set up the Rev A device in Mode 3, the jitter attenuation mode with external crystal "Mode3OvtInit.txt" script needs to be loaded after "Si5040InitialRegisterMapSettings.txt" is first loaded.

Note that these scripts should be loaded by using the Register Programmer. See "2.5. Si5040 EVB Software Description" on page 8 for more information on the Register Programmer.

1.7.2. For Evaluation Boards Populated with the Rev. B Device

Starting Oct 2006, no initialization script is required for Mode 0 operation. However, in order for the interrupt pin to function properly on the evaluation board, Register 2 needs to be set to 18h (default=58h) by using the Register Programmer. Note that this is to set the interrupt output driver as CMOS as the evaluation board does not have an external pullup on the interrupt signal.

If you need to set up the Rev B device in Mode 3, Register 134 needs to be set to 3h (default=30h) by using the Register Programmer, or simply go to System Programmer and click on the TX CDR/CMU Control link in the block diagram. Then, choose "Mode 3" from the "cmuMode" pull-down menu.

2. EVB Software Installation

The following sections describe how to install the EVB software.

2.1. PC System Requirements

- Microsoft Windows 2000 or Windows XP
- USB 2.0
- 2 MB of hard drive space
- 1024x768 screen resolution or greater (1280 x 1024 recommended)
- Microsoft .NET Framework 1.1
- Si5040 EVB Driver

Note: The Si5040 EVB driver is provided with the installation files.

2.2. Microsoft .NET Framework Installation

The Microsoft .NET Framework is required *before* installing and running the Si5040 software. Details and installation information about the .NET Framework are available via a shortcut in the NETFramework directory or at the following web site:

http://www.microsoft.com/downloads/details.aspx?FamilyId=262D25E3-F589-4842-8157-034D1E7CF3A3&displaylang=en

Contact your system administrator for more details.

2.3. Si5040 EVB Driver

The Si5040 evaluation board requires a driver to be controlled by the software. The following section lists the steps for installing and uninstalling the driver.

2.3.1. Install

The driver files must be installed *before* the EVB is connected to the PC via the USB cable. This installation usually only needs to be completed once per PC.

1. Navigate to the “Si5040EVBDriver” directory.
2. Double-click on the PreInstaller.exe file to run the installation program for the driver.
3. Click Install in the dialog box. Be sure to select a location on the PC’s hard drive for the files, if necessary.
4. If the PC is running Windows XP, click **Continue Anyway** when the wizard warns that the driver does not pass the Windows Logo verification for XP.

After the above files are installed, the operating system will be able to identify the EVB’s USB controller when the EVB is connected to the PC. The following steps occur when the EVB is connected to the PC for the first time.

For Windows 2000, when the EVB is connected to the PC, the operating system will display a dialog box indicating that it found new hardware. No other action is required. The driver installation can be verified in the Device Manager under the USB section; look for “Si5040EVB” in the list.

For Windows XP:

1. When the EVB is connected to the PC, the **Found New Hardware** wizard will appear. Use the default settings that will tell the PC to look for the driver.
2. Again, ignore the warning about the driver not passing verification by clicking **Continue Anyway**.
3. Click **Finish** to complete the install.

2.3.2. Uninstall

In the Control Panel, select Add/Remove Programs. Then select “Si5040EVB Driver Set” and click **Change/Remove**. The wizard will remove the necessary files.

2.4. Si5040 EVB Software Installation

To install:

1. Navigate to the “Si5040Software” directory.
2. Double-click on the **Setup.exe**
3. Follow the steps in the wizard to install the program.

Note: Use the default installation location for best results.

4. After the installation is complete, click on **Start →Programs→Skyworks Solutions→Si5040 Software**. Select one of the Si5040 programs to control the EVB.
5. Refer to the online help in each program by clicking **Help→Help.**

To uninstall:

1. Open Add/Remove Programs in the Control Panel.
2. Select the Si5040 Software, and click **Remove**.
3. Follow the steps in the wizard to complete the removal.

2.5. Si5040 EVB Software Description

There are three programs to control the Si5040. Each provides a different kind of access to the device. Refer to the online help in each program by clicking **Help→Help** in the menu for more information on how to use the software.

Program	Description
Register Viewer	The Register Viewer displays the current data in a table format sorted by register address of the Si5040 register map to provide a quick view of the Si5040's state. This program can save and print the register map.
Register Programmer	The Register Programmer provides low-level register control of the Si5040. Single and batch operations are provided to read from and write to the device. Register map files can be saved and opened in the batch mode.
System Programmer	The Si5040 System Programmer provides high-level control of the Si5040. There are multiple settings for this chip; so, this program will make it easier to configure these settings. (The settings this program can control are documented in the Si5040 data sheet.) The software can also save and open the register data in a text file format.

3. Typical Application Schematics

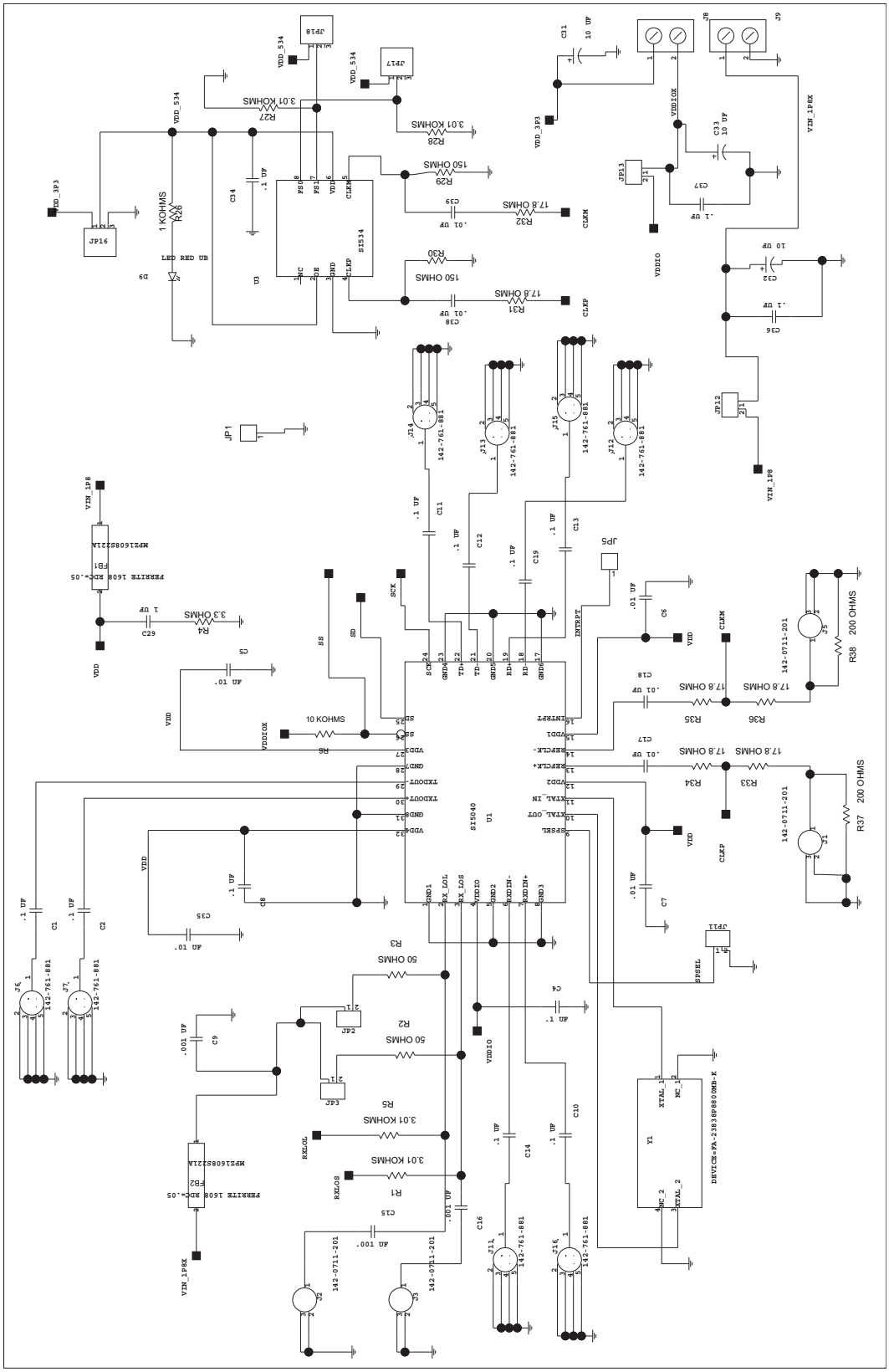

Figure 10. Application Schematic (Page 1)

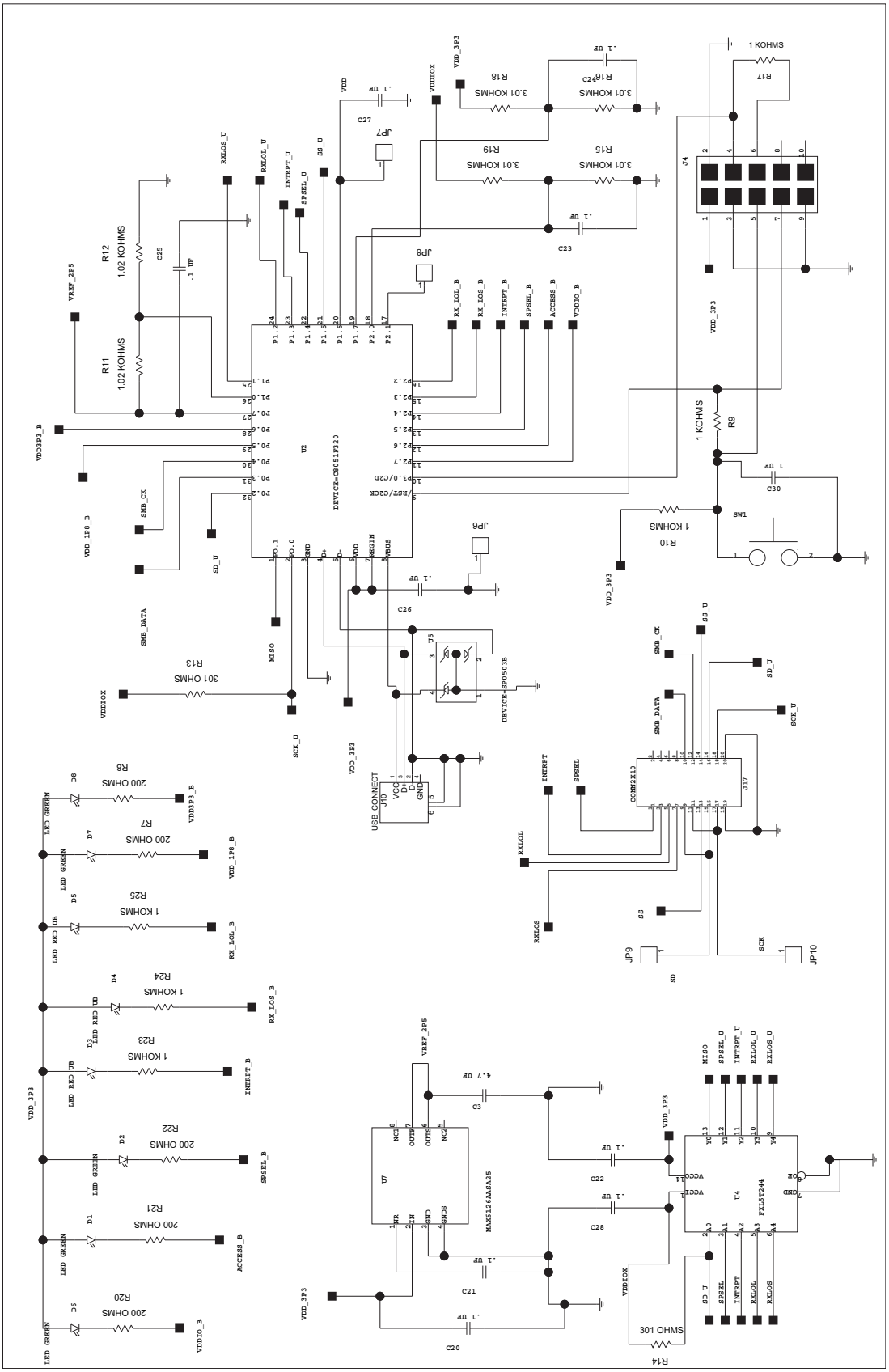

Figure 11. Application Schematic (Page 2)

4. Bill of Materials

Table 3. Si5040-EVB Bill of Materials

Item	Qty	Reference	Description	Manufacturer Number	Manufacturer
1	8	C1,C2,C10, C11,C12	CAP, SM, 0.1 µF, 10 V, 10%, X7R,0402	540L105KW10820T	ATC
		C13,C14,C19			
2	14	C4,C8,C20, C21,C22,C23, C24,C25,C26, C27,C28,C34, C36,C37,	CAP, SM, 0.1 µF, 16 V, 10%, X7R,0402	C0402X7R160-104KNE	Venkel
3	7	C5,C6,C7, C17,C18, C38,C39	CAP, SM, 0.01 µF, 25 V, X7R,0402	C0402X7R250-103KNE	Venkel
4	1	C3	CAP, SM, 4.7 µF, 6.3 V, X7R,0805	CEJMK212BJ475KG-T	Taiyo Yuden
5	3	C9,C15,C16	CAP, SM, 1000 pF, 50 V, 5%, C0G,0402	C0402C0G500-102JNE	Venkel
6	2	C29,C30	CAP, SM, 1 µF, 6.3 V, X7R, 0603	C0603X7R6R3-105KNE	Venkel
7	3	C31,C32,C33	CAP, SM, 10 µF, 10 V, X7R, 1206	C1206X7R100-106KNE	Venkel
8	5	D1,D2,D6, D7,D8	LED, SM, LN1371G, GREEN	LN1371G	Panasonic
9	4	D3,D4,D5,D9	LED, SM, LN1271, BRIGHT RED	LN1271RAL-TR	Panasonic
10	2	FB1,FB2	FERRITE, SM, 165 Ω, 2000 mA	MPZ1608S221A	TDK
11	4	J1,J2,J3,J5	CONN, SMA, SM, VERT	142-0711-201	Johnson Components
12	1	J4	CONN, HEADER, 5x2	103309-1	AMP
13	8	J6,J7,J11,J12, J13,J14,J15, J16	CONN, SMA, COPLANAR	142-0761-801	Johnson Components
14	2	J8,J9	CONN, POWER, 2 POSITION	1729018	Phoenix Contact
15	1	J10	CONN, USB, B, RECEPT	897-30-004-90-000000	MILL-MAX
16	1	J17	CONN, HEADER, 10X2	2340-6111TN or 2380-6121TN	3M
17	7	JP1,JP5,JP6, JP7,JP8,JP9, JP10	CONN, HEADER, 1X1	2340-6111TN or 2380-6121TN	3M
18	5	JP2,JP3,JP11, JP12,JP13	CONN, HEADER, 2x1	2340-6111TN or 2380-6121TN	3M
19	3	JP16,JP17, JP18	CONN, HEADER, 3x1	2340-6111TN or 2380-6121TN	3M
20	8	R1,R5,R15, R16,R18,R19, R27,R28	RES, SM, 3.01 kΩ, 1%, 0402	CR0402-16W-3011FT	Venkel

Table 3. Si5040-EVB Bill of Materials (Continued)

Item	Qty	Reference	Description	Manufacturer Number	Manufacturer
21	2	R2,R3	RES, SM, 49.9 Ω, 1%,0402	CR0402-16W-49R9FT	Venkel
22	1	R4	RES, SM, 3.3 Ω, 5%, 0402	CR0402-16W-3R3JT	Venkel
23	1	R6	RES, SM,10 kΩ, 1%, 0402	CR0402-16W-1002FT	Venkel
24	7	R7,R8,R20, R21,R22,R37, R38	RES, SM, 200 Ω, 1%, 0402	CR0402-16W-2000FT	Venkel
25	7	R9,R10,R17, R23,R24,	RES, SM, 1 kΩ, 1%, 0402	CR0402-16W-1001FT	Venkel
		R25,R26			
26	2	R11,R12	RES, SM, 1.02 kΩ, 0.1%, 0402	TFCR0402-16W-E-1021BT	Venkel
27	2	R13,R14	RES, SM,301, 1%, 0402	CR0402-16W-3010FT	Venkel
28	2	R29,R30	RES, SM,150, 1%, 0402	CR0402-16W-1500FT	Venkel
29	6	R31,R32,R33, R34,R35,R36	RES, SM, 17.8, 1%,0402	CR0402-16W-17R8FT	Venkel
30	1	SW1	SWITCH, PUSH BUTTON, MINIATURE	EVQPAD04M	Panasonic
31	1	U1	IC, SM, Si5040	Si5040	Skyworks Solutions
32	1	U2	IC, SM, MCU, 32 POS, QFN	C8051F320	Skyworks Solutions
33	1	U3	IC, Si534	534AB000129BG	Skyworks Solutions
34	1	U4	IC, SM, VOLTAGE-SUPPLY TRANSLATOR, 14 PIN DQFN	FXL5T244BQX	Fairchild
35	1	U5	IC, SM, DIODE ARRAY, 6 POS, SOT143	SP0503BAHT	Littlefuse
36	1	U7	IC, SM, VOLTAGE REFERENCE, 8-PIN SOIC	MAX6126AASA25	Maxim
37	1	Y1	CRYSTAL, SM, 114.285 MHz	7BA, 114.285 MHZ	TXC
No Load					
38	1	C35	CAP, SM, 0.01 µF, 25 V, X7R, 0402	C0402X7R250-103KNE	Venkel

5. Layers

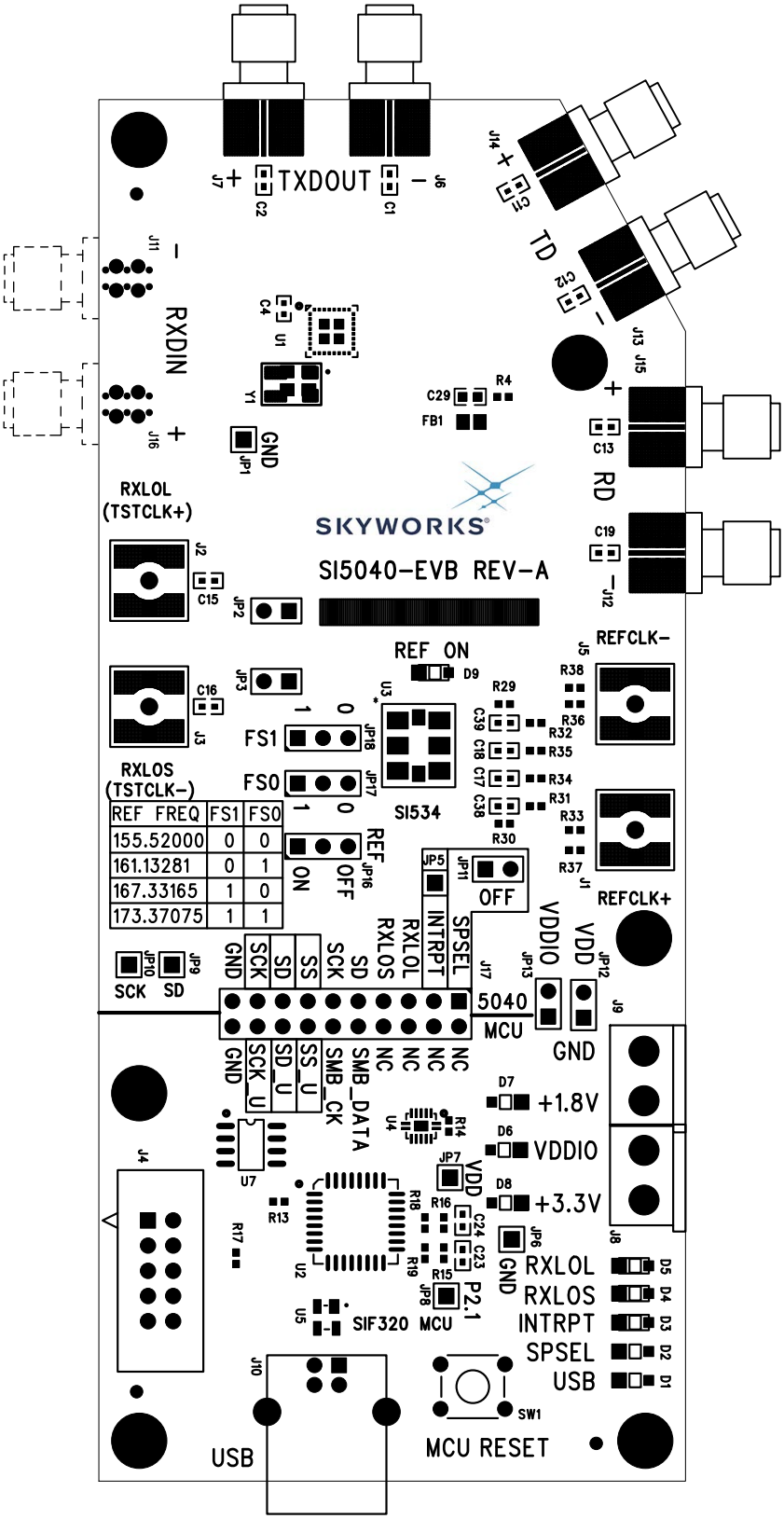

REF FREQ	FS1	FS0
155.52000	0	0
161.13281	0	1
167.33165	1	0
173.37075	1	1

Figure 12. Si5040-EVB Top Silkscreen

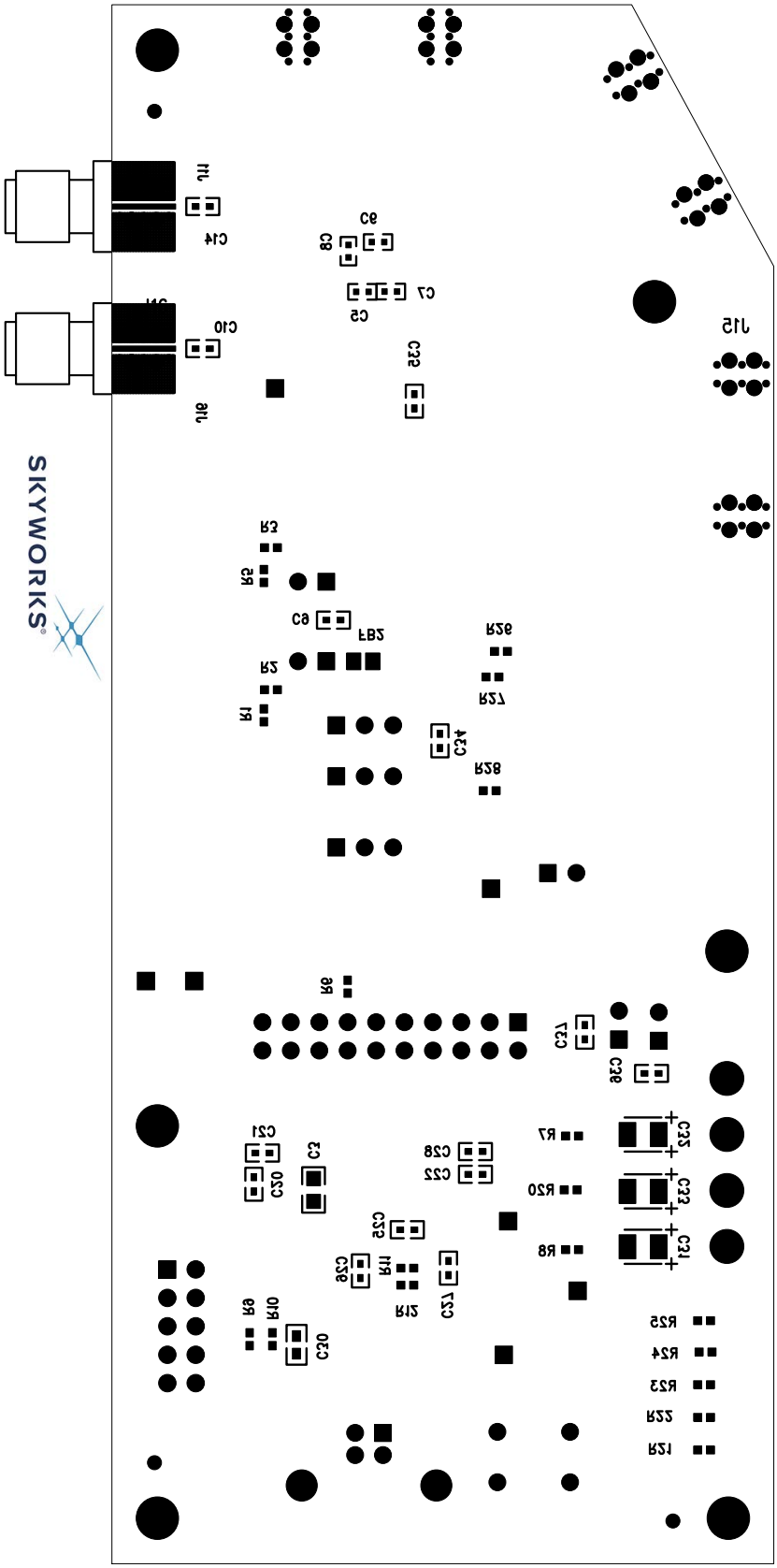

Figure 13. Si5040-EVB Bottom Silkscreen

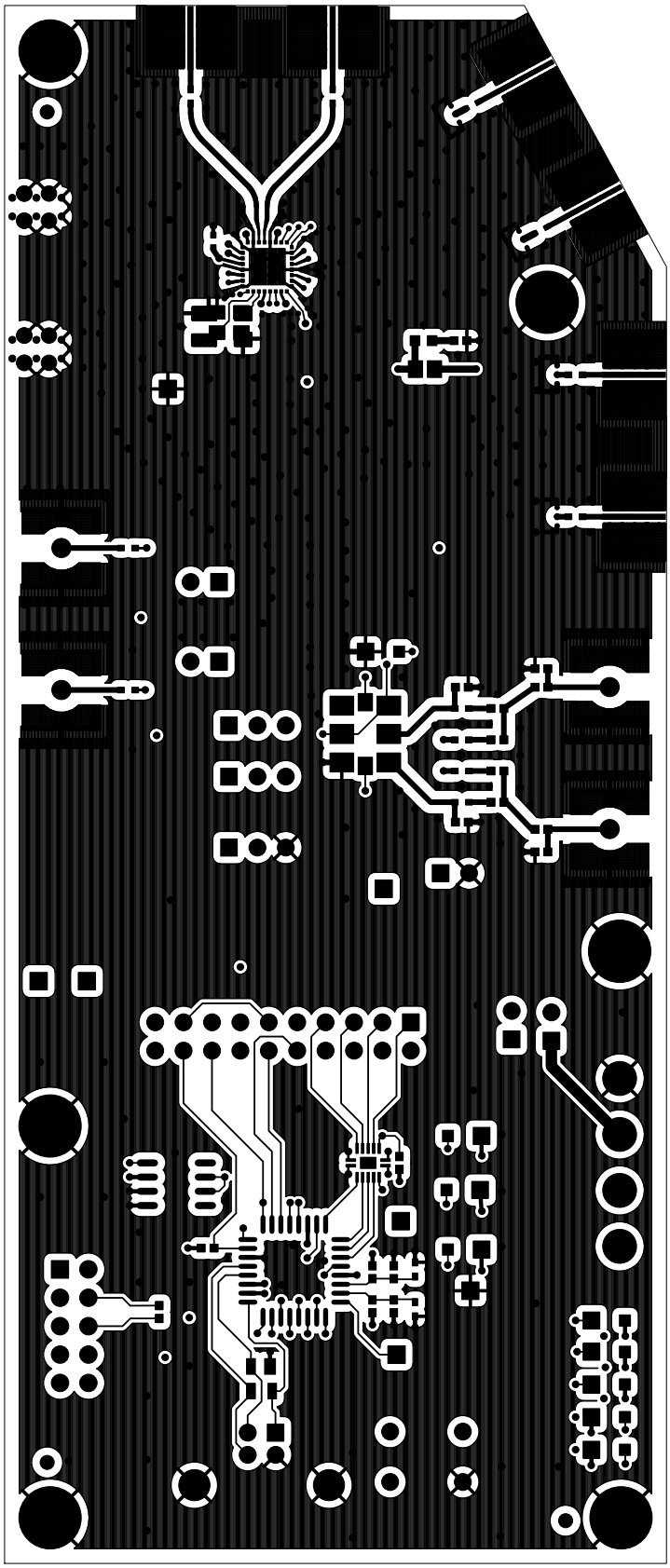

Figure 14. Primary Component Side

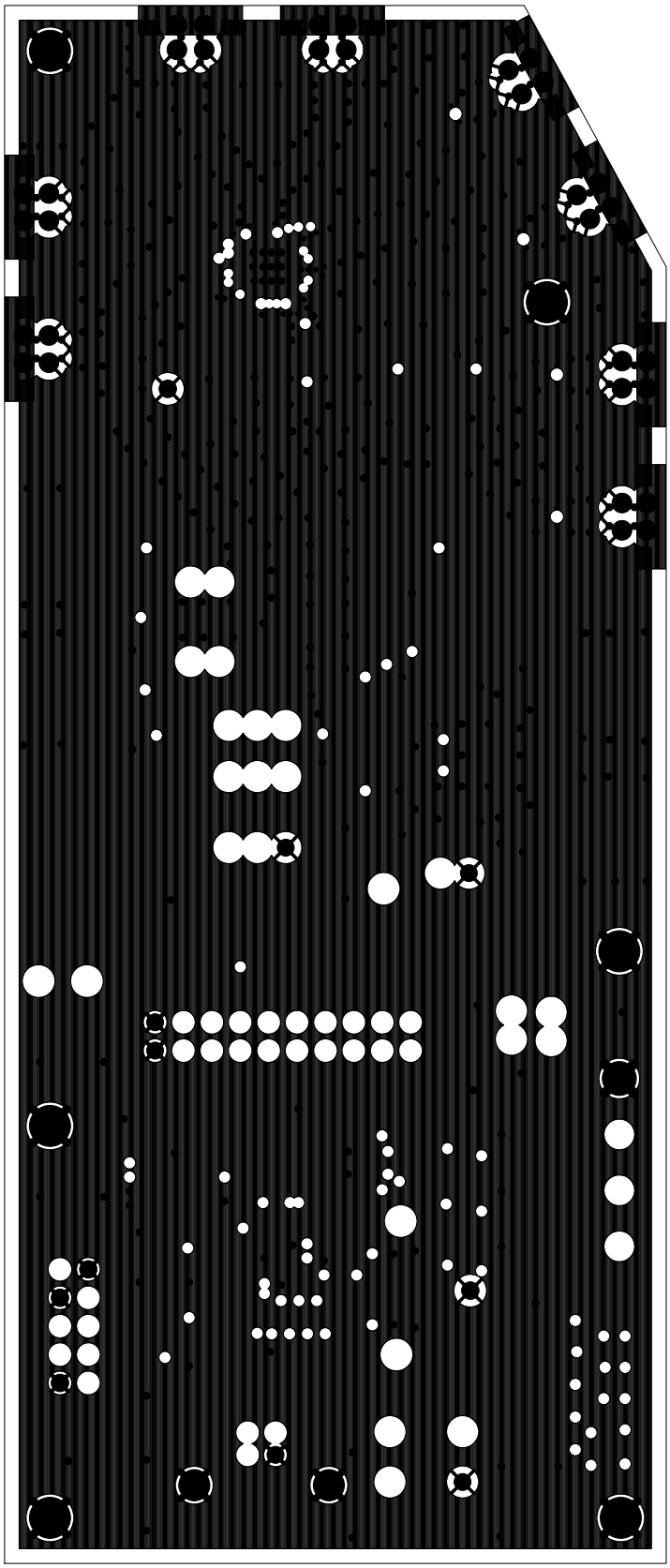

Figure 15. Plane 1 (GND)

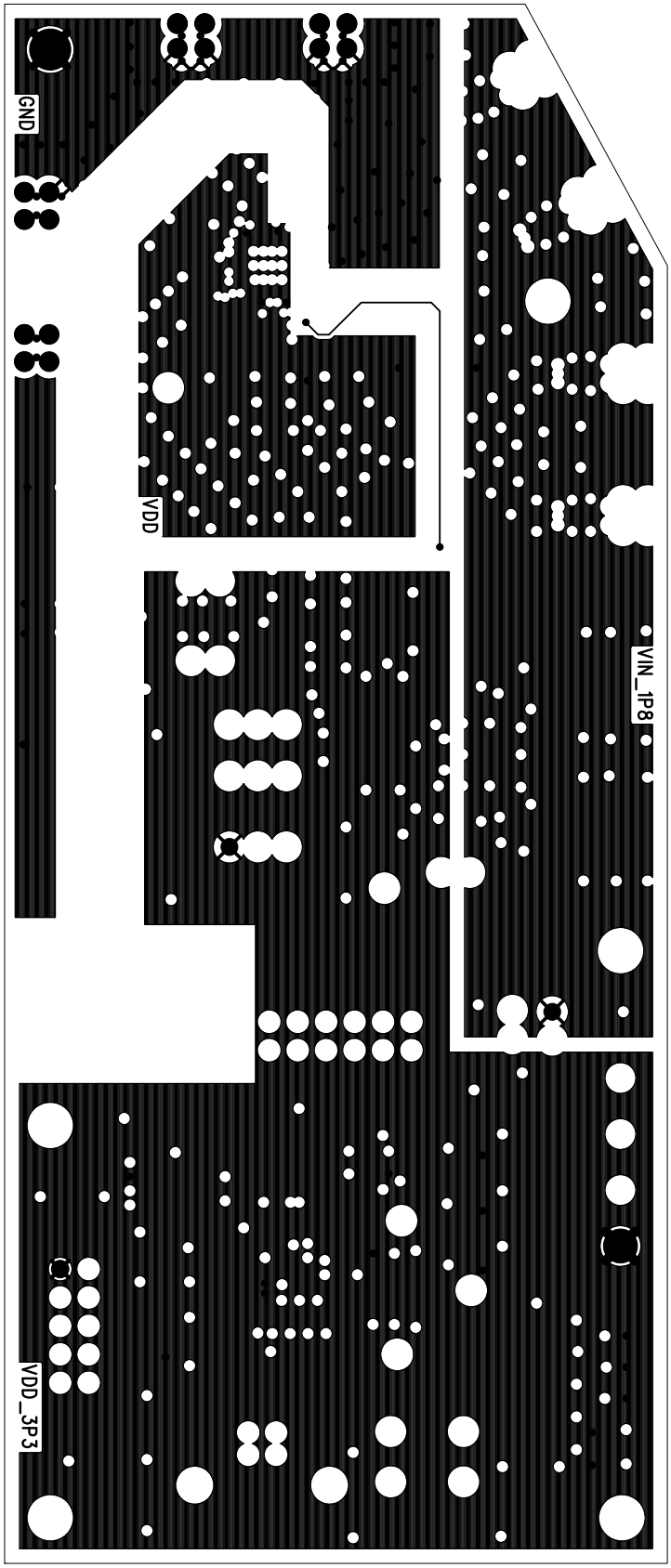

Figure 16. Plane 2 (PWR)

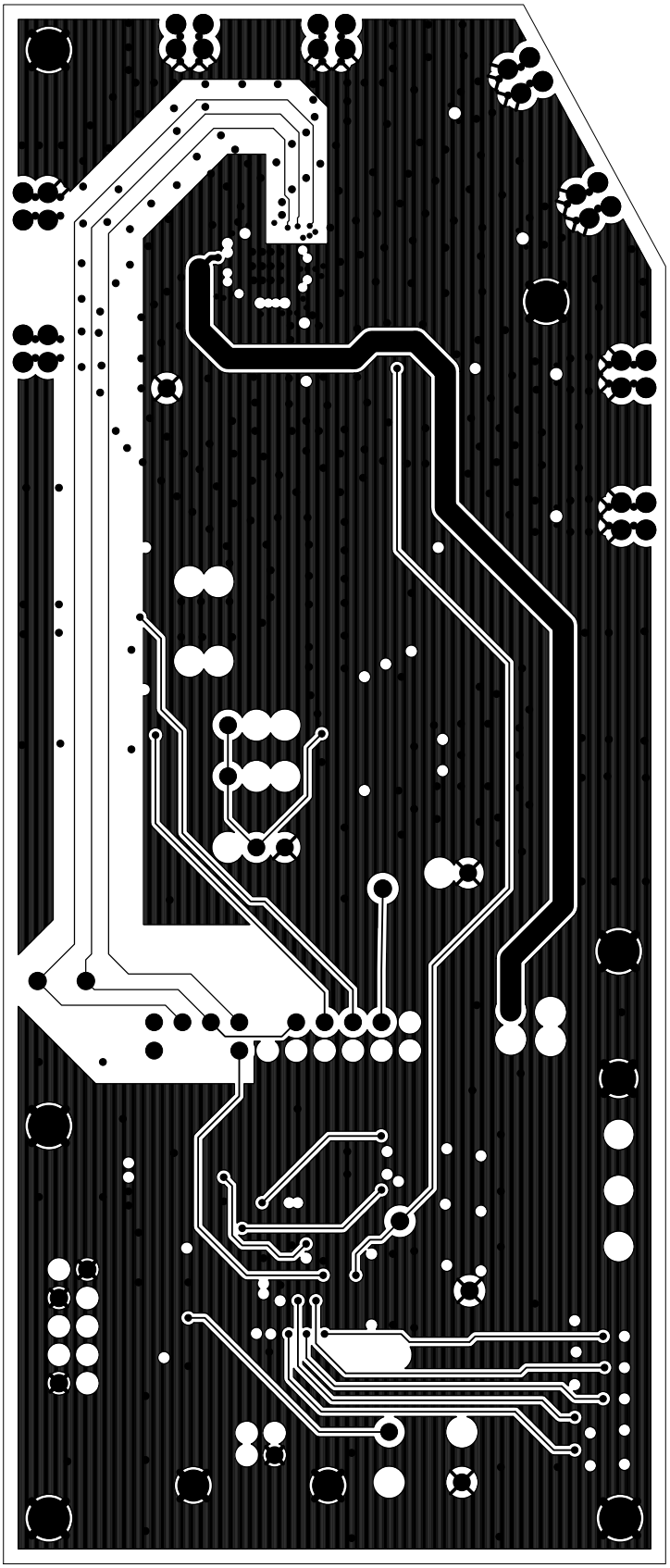

Figure 17. Signal 1

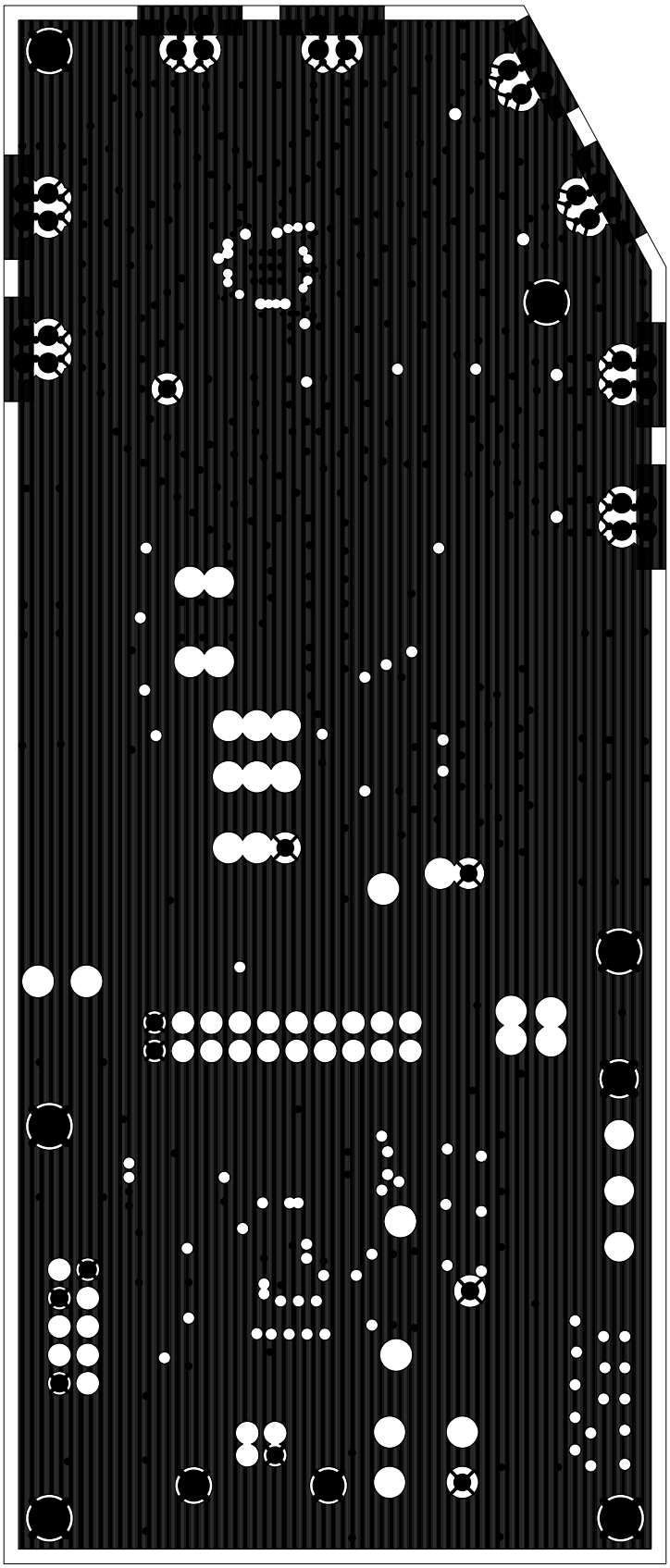

Figure 18. Plane 3 (GND)

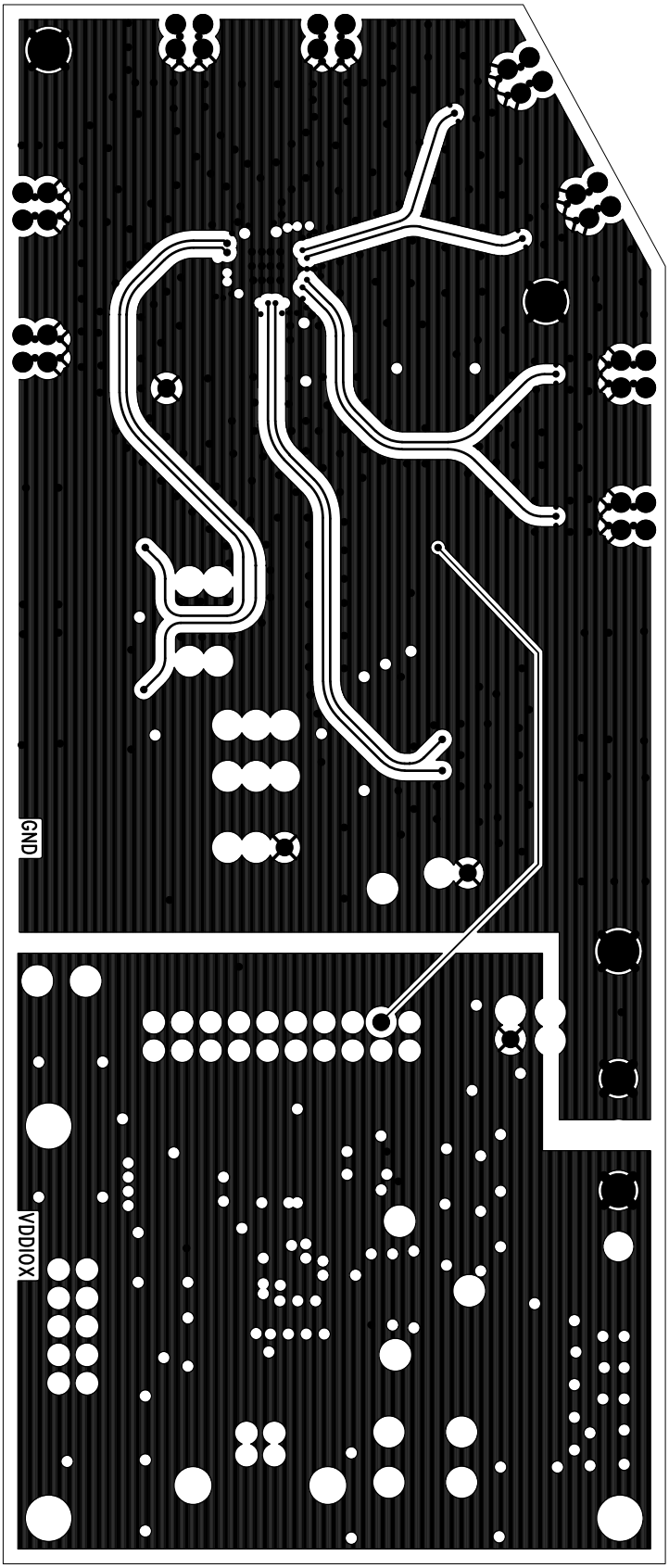

Figure 19. Signal 2

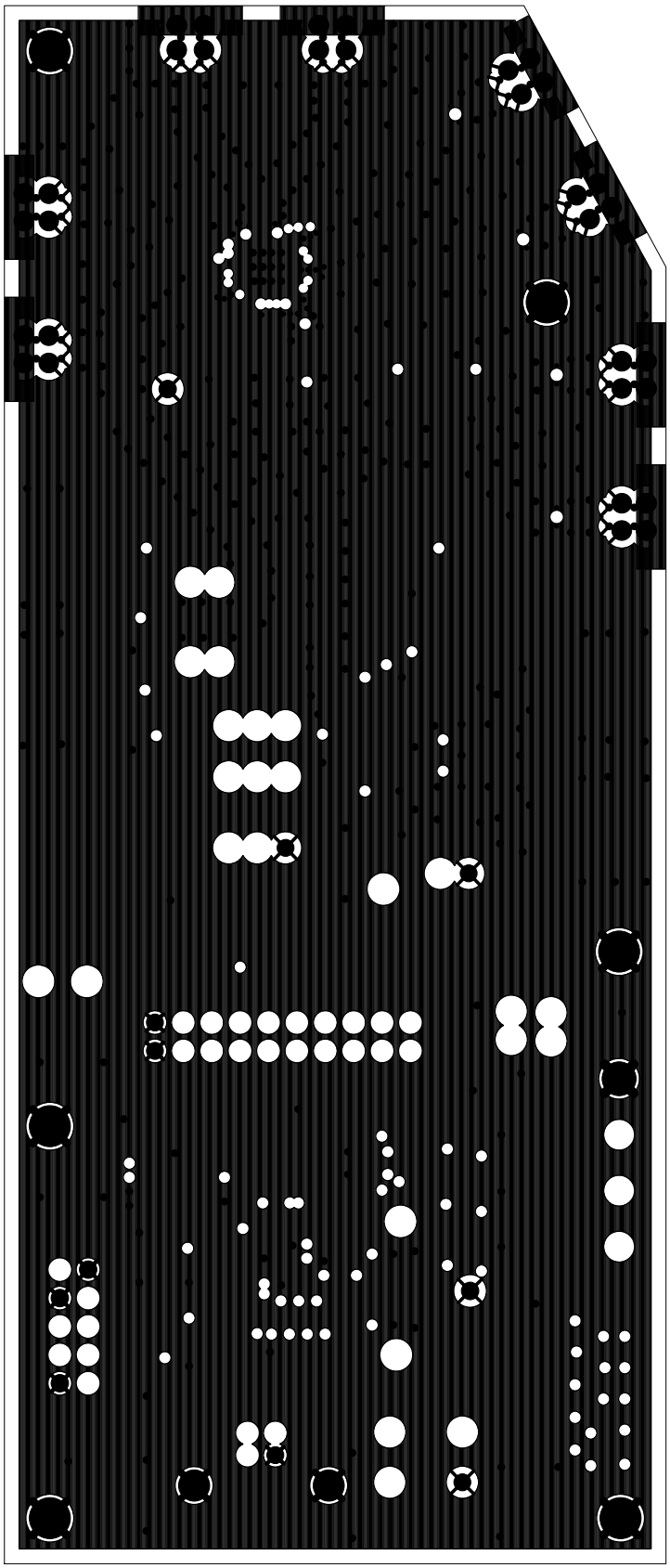

Figure 20. Plane 4 (GND)

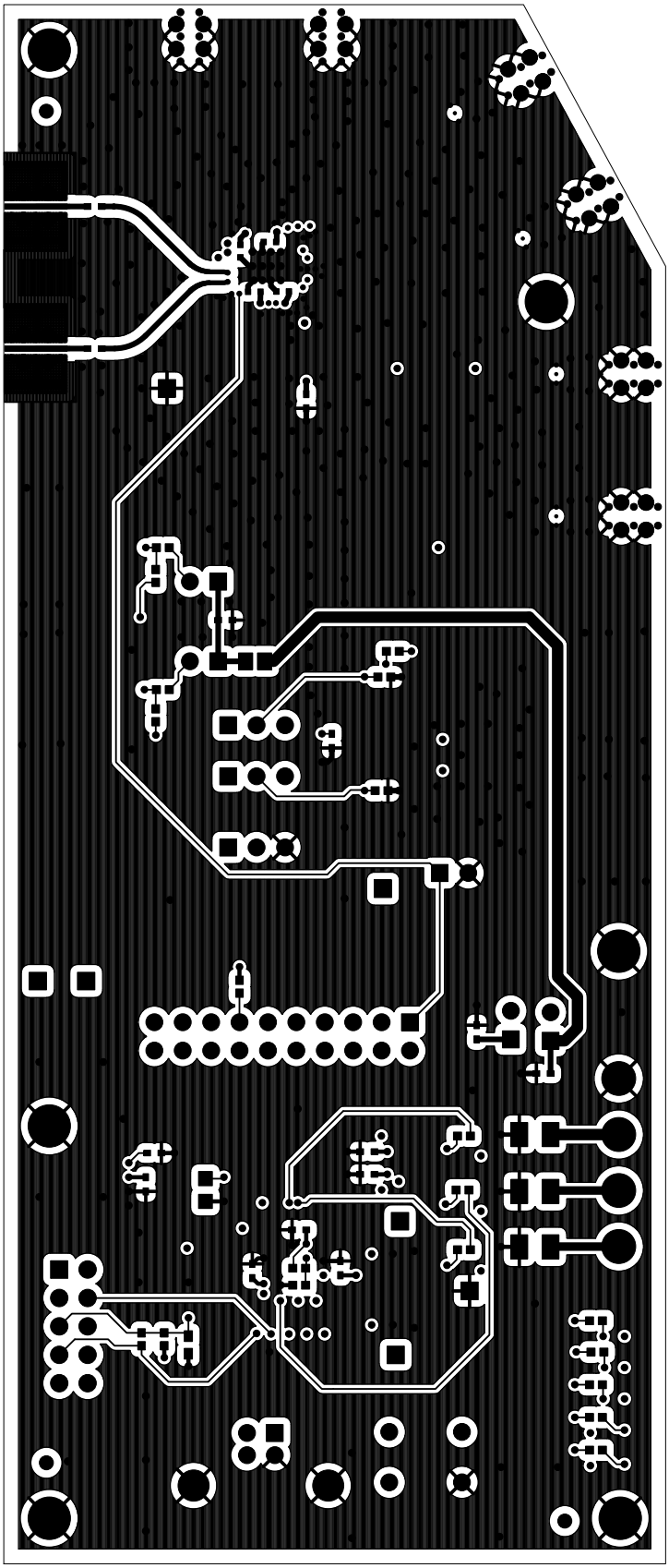

Figure 21. Secondary Side

Document Change List

Revision 0.1 to Revision 0.2

- Added Si5040 Rev B device release notice.
- Updated Si5040-EVB Quick Start section.
- Added wrong silk screen label notice. INTRPT on JP17 should be labeled as INTRPTB.
- Updated Start Up Script(s) section. No script file is required for Si5040 Rev B device.

Revision 0.2 to Revision 0.3

- Updated "1.3.4. Synchronous Test Clock" on page 4.
  - Changed the /16 clock mode to a /64 clock mode.

Revision 0.3 to Revision 0.4

- Since the EVB was modified to include pre-emphasis on the RD output, the EVB datasheet was changed to describe this modification.

SKYWORKS®

ClockBuilder Pro

Customize Skyworks clock generators, jitter attenuators and network synchronizers with a single tool. With CBPro you can control evaluation boards, access documentation, request a custom part number, export for in-system programming and more!

www.skyworksinc.com/CBPro

Portfolio
www.skyworksinc.com/ia/timing

SW/HW
www.skyworksinc.com/CBPro

Quality
www.skyworksinc.com/quality

Support & Resources
www.skyworksinc.com/support

Copyright © 2021 Skyworks Solutions, Inc. All Rights Reserved.

Information in this document is provided in connection with Skyworks Solutions, Inc. ("Skyworks") products or services. These materials, including the information contained herein, are provided by Skyworks as a service to its customers and may be used for informational purposes only by the customer. Skyworks assumes no responsibility for errors or omissions in these materials or the information contained herein. Skyworks may change its documentation, products, services, specifications or product descriptions at any time, without notice. Skyworks makes no commitment to update the materials or information and shall have no responsibility whatsoever for conflicts, incompatibilities, or other difficulties arising from any future changes.

No license, whether express, implied, by estoppel or otherwise, is granted to any intellectual property rights by this document. Skyworks assumes no liability for any materials, products or information provided hereunder, including the sale, distribution, reproduction or use of Skyworks products, information or materials, except as may be provided in Skyworks' Terms and Conditions of Sale.

THE MATERIALS, PRODUCTS AND INFORMATION ARE PROVIDED "AS IS" WITHOUT WARRANTY OF ANY KIND, WHETHER EXPRESS, IMPLIED, STATUTORY, OR OTHERWISE, INCLUDING FITNESS FOR A PARTICULAR PURPOSE OR USE, MERCHANTABILITY, PERFORMANCE, QUALITY OR NON-INFRINGEMENT OF ANY INTELLECTUAL PROPERTY RIGHT; ALL SUCH WARRANTIES ARE HEREBY EXPRESSLY DISCLAIMED. SKYWORKS DOES NOT WARRANT THE ACCURACY OR COMPLETENESS OF THE INFORMATION, TEXT, GRAPHICS OR OTHER ITEMS CONTAINED WITHIN THESE MATERIALS. SKYWORKS SHALL NOT BE LIABLE FOR ANY DAMAGES, INCLUDING BUT NOT LIMITED TO ANY SPECIAL, INDIRECT, INCIDENTAL, STATUTORY, OR CONSEQUENTIAL DAMAGES, INCLUDING WITHOUT LIMITATION, LOST REVENUES OR LOST PROFITS THAT MAY RESULT FROM THE USE OF THE MATERIALS OR INFORMATION, WHETHER OR NOT THE RECIPIENT OF MATERIALS HAS BEEN ADVISED OF THE POSSIBILITY OF SUCH DAMAGE.

Skyworks products are not intended for use in medical, lifesaving or life-sustaining applications, or other equipment in which the failure of the Skyworks products could lead to personal injury, death, physical or environmental damage. Skyworks customers using or selling Skyworks products for use in such applications do so at their own risk and agree to fully indemnify Skyworks for any damages resulting from such improper use or sale.

Customers are responsible for their products and applications using Skyworks products, which may deviate from published specifications as a result of design defects, errors, or operation of products outside of published parameters or design specifications. Customers should include design and operating safeguards to minimize these and other risks. Skyworks assumes no liability for applications assistance, customer product design, or damage to any equipment resulting from the use of Skyworks products outside of Skyworks' published specifications or parameters.

Skyworks, the Skyworks symbol, Sky5®, SkyOne®, SkyBlue™, Skyworks Green™, Clockbuilder®, DSPLL®, ISOmodem®, ProSLIC®, and SiPHY® are trademarks or registered trademarks of Skyworks Solutions, Inc. or its subsidiaries in the United States and other countries. Third-party brands and names are for identification purposes only and are the property of their respective owners. Additional information, including relevant terms and conditions, posted at www.skyworksinc.com, are incorporated by reference.

Skyworks Solutions, Inc. | Nasdaq: SWKS | sales@skyworksinc.com | www.skyworksinc.com
USA: 781-376-3000 | Asia: 886-2-2735 0399 | Europe: 33 (0)1 43548540 |